Date Distributed: December 19th, 2019

THE NATIONAL BOARD OF BOILER AND PRESSURE VESSEL INSPECTORS

NATIONAL BOARD INSPECTION CODE COMMITTEE

AGENDA

Meeting of January 16th, 2020
San Diego, CA

The National Board of Boiler & Pressure Vessel Inspectors
1055 Crupper Avenue
Columbus, Ohio 43229-1183
Phone: (614)888-8320
FAX: (614)847-1828

1. **Call to Order**

   8:00 AM

   Some time will be taken to honor and remember Mr. Don Cook, Mr. Kevin Simmons, and Mr. David Martinez for their impactful and dedicated service to the NBIC committees and to the entire boiler and pressure vessel industry.

2. **Introduction of Members and Visitors**

3. **Check for a Quorum**

4. **Awards/Special Recognition**

   - Mr. George Galanes – 20 years of service on Main Committee

5. **Announcements**

   The National Board will be hosting a reception for all committee members and visitors on Wednesday evening at 5:30pm at The Smoking Gun. Additional information about the reception can be found on the Hotel Information webpage for the meeting: https://www.nationalboard.org/Index.aspx?pageID=456&ID=478

6. **Adoption of the Agenda**

7. **Approval of the Minutes of the July 17th, 2019 Meeting**

   The minutes are available for review on the National Board website, www.nationalboard.org.

8. **Review of Rosters (Attachment Page 1)**

   a. **Membership Nominations**

      Main Committee members:
      - Mr. Alfred Donaldson – Manufacturers
      - Mr. Thakor Patel – Manufacturers
      - Mr. Randy Austin – Users

      Subcommittee Members:

      - Mr. Patrick Jennings (AIA) – Subcommittee Installation
      - Mr. Jeff Petersen (Users) – Subcommittee Inspection
      - Mr. Vincent Scarcella (AIA) – Subcommittee Inspection
      - Mr. Del Schirmer (AIA) – Subcommittee Pressure Relief Devices
      - Mr. Jon Wolf (AIA) – Subcommittee Pressure Relief Devices
      - Mr. Alfred Donaldson (Manufacturers) – Subcommittee Pressure Relief Devices

   b. **Membership Reappointments**

- Mr. Jim Getter – Main Committee
- Mr. Brian Morelock – Main Committee, Subcommittee Repairs & Alterations
- Mr. Venus Newton – Main Committee
- Ms. Melissa Wadkinson – Main Committee
- Mr. Stanley Konopacki – Subcommittee Installation
- Mr. Rex Smith – Subcommittee Installation
- Mr. Eddie Wiggins – Subcommittee Installation
- Mr. Darrell Graf – Subcommittee Inspection
- Mr. Thomas Vandini – Subcommittee Inspection
- Mr. Kim Beise – Subcommittee Pressure Relief Devices
- Mr. David McHugh – Subcommittee Pressure Relief Devices

c. Officer Positions

9. Items Approved for 2021 NBIC

a. Part 1

i. Item 17-121 – changes to installation and discharge requirements for pressure relief valves (Part 1, 2.9.6)
ii. Item 17-125 – changes to inlet opening diameter requirements for steam heating boiler pressure relief valves (Part 1, 3.9.2)
iii. Item 17-130 – simplified definition of where pressure relief devices will discharge pressure (Part 1, 4.5.6)
iv. Item NB15-0108A – new supplement in Part 1 for High-Temperature Water Boilers
v. Item 19-51 – safety valve requirements for boilers up to 4000 lb/hr (Part 1, 2.9.1.1)
vi. Item 18-44 – making modular limits in Part 1, 3.7.8.1 a) consistent with ASME Section IV
vii. Item 17-159 – hot water storage tanks (Part 1, 4.7)
viii. Item 18-26 – installation requirements for CO2 vessels (Part 1, S3.4)
ix. NB12-0302 – new supplement for PVHO installation

b. Part 2

i. Items 18-61 and 18-101 – additional inspection requirements for PVHOs (Part 2, 2.3.6.8)
ii. Item 18-89 – correcting the text in Part 2, S2.4 to reference Part 2, Section 3 instead of Part 3, Section 3
iii. Item 19-33 – changes to Part 2, 1.1
iv. Item 19-65 – Changes to Yankee Dryer supplement (Part 2, S5.2.3)
v. Item 19-30 – Temporary ASME nameplate removal for inspection (Part 2, S7.9)
vi. Item 18-79 – changing should to shall in Part 2, S12.3 b) 4), S12.5, and S12.7
vii. Item 18-27 – requirements for CO2 vessels (Part 2, S12.5)

c. Part 3

i. Item 18-83 – clarifying when an increase in the heating surface or steaming capacity is considered an alteration (Part 3, 3.4.4 e))
ii. Item 18-88 – correcting the reference in S2.6 a) from “NBIC Part 3, 1.6” to “NBIC Part 3, 1.5”
iii. Item 18-98 – updated definition for replacement parts in S2.7.2 that refers back to Part 3, 3.2.2
iv. Item 18-88 - correcting the reference in S2.9 from “NBIC Part 3, 1.6” to “NBIC Part 3, 1.5”
v. Item 18-67 – new definitions for brazing, fusing, and welding (All Parts, 9.1)
vi. Item 19-12 – revisions to clarify Quality Assurance Program (Part 3, 1.6.3 b))

vii. Item 19-43 – updating ISO/IEC-17025 references in Part 3, 1.6.6.2 m), 1.6.7.2 m), and 1.6.8.2 m)
viii. Item 18-85 – SWPS updates (Part 3, Table 2.3)
ix. Item 18-12 – revision to welding method 6 to allow for external weld metal buildup (Part 3, 2.5.3.6)
x. Item 19-50 – revising Part 3, 3.3.4.3 e) 3) l. to match ASME PCC-2
xi. Item 19-15 – ASME Section VIII Div. 2 Class 1/Class 2 distinction (Part 3, 3.3.5.2 and 3.4.5.1)
xii. Item 19-52 – alternative NDE requirements (Part 3, 4.2 a))
xiii. Item 18-84 – use of patch bolts in accordance with ASME BPVC (Part 3, S1.2.8)
xiv. Item 19-21 – additional wording about alterations in Part 3, S2.11 a)
xv. Item 19-53 – historical boiler record retention (Part 3, S2.12)
xvi. Item 17-166 – reducing maximum nozzle diameter for nozzle replacement routine repairs in graphite pressure vessles (Part 3, S3.3)
xvii. Item 19-24 - slight wording change in Part 3, S6.16.4 b) 1)

d. Part 4

i. Item 17-121 – changes to installation and discharge requirements for pressure relief valves (Part 4, 2.2.10)
ii. Item 17-125 – changes to inlet opening diameter requirements for steam heating boiler pressure relief valves (Part 4, 2.4.2)
iii. Item 17-130 – simplified definition of where pressure relief devices will discharge pressure (Part 4, 2.5.6 f))
iv. Item NB17-1401 – requirements to remove shipping caps/plugs from pressure relief devices prior to installation (Part 4, S4.4 b) 2))
v. Item 17-131 – adding language about potable hot water storage tanks (Part 4, 2.5.7)

10. Report of Subcommittees

a. Subcommittee Repairs & Alterations

i. Interpretations

Item Number: 19-5	**NBIC Location: Part 3, 3.2.6**	**Attachment Page 10**
General Description: Reference to Other Codes and Standards **Subgroup:** Repairs and Alterations **Task Group:** B. Morelock (PM) **Explanation of Need:** Repair Methodology proposed by user is rejected by AI as there are no codes, standards, and practices available to support repair method. **July Meeting Action:** Mr. Troutt introduced the item and the proposed committee response. A motion was made and seconded to approve the proposed questions and responses. Some discussion held on the wording of the committee questions and which to include in the official response. It was requested that the proposal be revised and letter balloted to the Main Committee. The original motion to voice vote the proposal was withdrawn.		

Item Number: 19-10	NBIC Location: Part 3, Introduction, paragraph on Interpretations	Attachment Page 13

General Description: Allow interpretations to be used in any edition, provide the same wording

Subgroup: Repairs and Alterations
Task Group: K. Moore (PM)

Explanation of Need: NBIC currently limits each interpretation to the edition it was issued for. However often time the words in question do not change from one edition to another. At present a new interpretation would be needed for each edition of the NBIC to address the same issues, this is a delay to field work and a drain on NBIC committee time.

July Meeting Action: Mr. Troutt gave a progress report on the item and asked that the other subcommittees provide feedback for the proposal. The NBIC Secretary will send the proposal to the other committees as a review and comment ballot. Also, NB Staff will be consulted as the best way to send out this multi-discipline interpretation.

Item Number: 19-25	NBIC Location: Part 3, 4.4.2 c)	Attachment Page 15

General Description: NDE methods to do in lieu of Hydro test

Subgroup: Repairs and Alterations
Task Group: J. Siefert (PM)

Explanation of Need: For ASME BPV Section VIII Division 2 Vessel is under Alteration with Re-rate of lowering MAWP & increasing of Design Temperature & there is no physical alteration in the Vessel but only change is in the Alteration design report because of different design stress intensity value at higher design temperature.

July Meeting Action: Mr. Troutt introduced the item and requested that the proposal be sent to the Main Committee as a letter ballot.

Item Number: 19-26	NBIC Location: Part 3, 3.3.2	Attachment Page 20

General Description: Clarification on welding repairs on appendages

Subgroup: Repairs and Alterations
Task Group: P. Shanks (PM)

Explanation of Need: The original submitter of this item will sometimes need to perform a welding repair on an appendage (not on the tank itself) in order for the complete process of refurbishment to be done for their customers' expectations. There appears to be no direct reference to these types of minor welding repairs for the refurbishment process in the NBIC code.

July Meeting Action: Mr. Troutt introduced the item and gave some additional background information. He then requested that it be sent to Main Committee letter ballot. A question was asked about whether or not nameplate removal is involved, and it was confirmed that the nameplate was not part of the inquiry. Mr. Scribner suggested that a question dealing with the nameplate be included in the proposal. The project manager agreed to amend the proposal to include a question on nameplates before sending it to the NBIC Secretary for letter ballot.

Update: A proposal for this item was balloted to Main Committee but failed to pass.

Item Number: 19-34	NBIC Location: Part 3, 3.2.2 e)	Attachment Page 22

General Description: Is it the intent of Part 3, 3.2.2 e) that the reference to the original code of construction is for determining the hydrostatic test pressure?

Subgroup: Repairs and Alterations

Task Group: P. Edwards – PM

Explanation of Need: NBIC Part 3 Section 3 paragraph 3.2.2 e) (shown below) states that replacement parts shall receive a pressure test as required by the original code of construction. The original submitter is concerned that this clause is not being interpreted consistently by all users of the NBIC. The words in question are "…as required by the original code of construction." ASME issued interpretation I-16-1 (shown below) and revised PW-54 to clarify that Section I does not contain requirements for the hydrostatic testing of replacement parts provided for an existing unit. Based on this, the words "… as required by the original code of construction." Could be interpreted to mean that pressure testing of the parts is not required because Section I does not require testing of replacement parts. The submitter does not think that was the Committee's intent when clause e) was added to 3.2.2. Linking the words "original code of construction" to the test pressure would eliminate the potential interpretation that testing is only required when the original code of construction specifically requires testing of replacement parts.

July Meeting Action: Mr. Troutt introduced the item and provided some additional background information. A motion was made and seconded to approve the proposal. Mr. Wielgoszinski asked if a code revision will be made along with this interpretation. It was confirmed that an item will be opened to address a code revision, but nothing had been done at this time. The original motion was withdrawn to wait until a proposed revision is available to accompany the interpretation.

Item Number: 19-36	NBIC Location: Part 3, 3.3.2 & 3.3.5	Attachment Page 25

General Description: Routine Repairs of VIII Div 2 and Div 3 PV

Subgroup: Repairs and Alterations

Task Group: J. Pillow (PM)

Explanation of Need: Para 3.3.2 talks about requirements for and examples of routine repairs. It does not specify any restrictions on pressure retaining items construction Code. It states that Routine repairs are repairs for which the requirements for in-process involvement by the Inspector and stamping by the "R" Certificate Holder may be waived as determined appropriate by the Jurisdiction and the Inspector. It states that all other applicable requirements of this code (NBIC) shall be met. Para 3.3.5.1 of NBIC states that the following requirements shall apply for the repair of pressure vessels constructed to the requirements of Section VIII, Division 2 or 3, of the ASME Code. This calls for properly Certified repair plan to be submitted to the Inspector who will make acceptance inspection and sign R-1 Form.

July Meeting Action: Mr. Troutt introduced the item and provided some additional background information. He then requested that this item be sent out for letter ballot to the Main Committee.

Update: A proposal for this item was balloted to Main Committee but failed to pass.

Item Number: 19-42	NBIC Location: Part 3, 3.3.3 s) & 3.4.4 g)	Attachment Page 28

General Description: 3.3.3 s design intent clarification vs 3.4.3 g

Subgroup: Repairs and Alterations

Task Group: P. Shanks (PM)

Explanation of Need: The design requirement in 3.3.3 s) is not well defined and is allowing potentially unsafe material changes to be conducted as repairs without adequate assessment.

July Meeting Action: Mr. Troutt introduced the item and said that work is still being done on the proposal.

ii. New Interpretation Requests:

Item Number: 19-62	NBIC Location: Part 3, 2.5.3.6	Attachment Page 29

General Description: Interpretation for using NBIC Part 3, 2.5.3.6 Welding Method 6 on Grade 92

Subgroup: Repairs and Alterations

Task Group: None Assigned.

Explanation of Need: End-users are experience failures in SA-213 T92 Code Case 2179 material and would like the option to invoke Welding Method 6 for repairs internal to the boiler setting.

Item Number: 19-66	NBIC Location: Part 3, 3.4	Attachment Page 30

General Description: Shell Side Heat Exchanger PWHT

Subgroup: Repairs and Alterations

Task Group: None Assigned.

Explanation of Need: An R Certificate Holder is Doing Repair Work on the Shell Side of Heat Exchanger, which was not PWHT Earlier. As per Client Request, Welded Joints are Post weld Heat Treated and Consider as Alteration, Client wants Shell Side to Under Go Full Post weld Heat Treatment Including areas not repaired. NDE is being Carried out for Complete Equipment and Client wants PWHT for Welds which are in Services and without any repairs.

Item Number: 19-67	NBIC Location: Part 3, 3.4	Attachment Page 31

General Description: Clarification of Part 3, 1.5.1 d) 1)

Subgroup: Repairs and Alterations

Task Group: None Assigned.

Explanation of Need: The original submitter interprets the above statement to mean a stamp holder must do repairs or alterations to the NBIC. Clarification is requested as the statement "as applicable" is ambiguous.

Item Number: 19-86	NBIC Location: Part 3, 2.2 & 2.2.1	Attachment Page 32

General Description: National Certified Pipe Welding Bureau (NCPWB) welding procedure specs

Subgroup: Repairs and Alterations

Task Group: None Assigned.

Explanation of Need: Some ASME and National Board Certificate Holders have presented NCPWB procedures to Team Leaders (designees) at joint reviews as part of their welding demonstrations, and those companies may not understand the limited scope in which the procedures may be used.

Item Number: 19-87	NBIC Location: Part 3, 5.6	Attachment Page 34

General Description: Form Registration Log

Subgroup: Repairs and Alterations

Task Group: None Assigned.

Explanation of Need: Many "R" Certificate Holders now use the National Board EDT System to register "R" Forms. All of the required log information in paragraph 5.6 of Part 3 is available in EDT, therefore it is unnecessary and redundant for "R" Certificate Holders to maintain a separate log outside the EDT system.

iii. Action Items – Old Business

Item Number: NB15-1405	NBIC Location: Part 3, 1.2	Attachment Page 35

General Description: Impact testing of P-11B Material

Subgroup: Repairs and Alterations

Task Group: N. Carter (PM), P. Davis, G. Galanes, P. Shanks

July Meeting Action: Mr. Troutt reported that the proposal for this item is still being developed.

Item Number: NB15-2208	NBIC Location: Part 3	No Attachment

General Description: Develop supplement for repairs and alterations based on international construction standards

Subgroup: Graphite

Task Group: Greg Becherer (PM)

July Meeting Action: Mr. Troutt reported that the proposal for this item is still being developed.

Item Number: NB16-1403	NBIC Location: Part 3, S4	Attachment Page 41

General Description: Add information on repair of high pressure vessels.

Subgroup: FRP

Task Group: N. Newhouse (PM)

July Meeting Action: Mr. Troutt reported that the proposal for this item will be sent to subcommittee letter ballot prior to the next meeting. He also requested that it be balloted to Main Committee for review and comment when the proposal is sent to subcommittee letter ballot.

Update: This item was approved by SC R&A via letter ballot.

Item Number: NB16-1502	NBIC Location: Part 3	No Attachment

General Description: Develop supplement for repairs and alterations based on international construction standards

Subgroup: SG Repairs and Alterations
Task Group: International Repair Supplement Task Group, Chuck Withers (PM)

July Meeting Action: Mr. Troutt reported that the proposal for this item is still being developed.

Item Number: 17-134	NBIC Location: Part 3, Section 5	No Attachment

General Description: Proposed Revision for registration of Form R-1 with the National Board containing ASME pressure part data reports attached.

Subgroup: Repairs and Alterations

Task Group: P. Shanks (PM), Rob Troutt, Joel Amato, Kathy Moore, Paul Edwards

July Meeting Action: Mr. Troutt reported that the proposal for this item is still being developed.

Item Number: 17-137	NBIC Location: Part 3, S4.18.2	Attachment Page 44

General Description: Remove "sand" blasting and replace with "abrasive" in Part 3, S4.18.2

Subgroup: FRP

Task Group: Terry Cowley (PM)

July Meeting Action: Mr. Troutt reported that the proposal for this item had the incorrect title and asked the NBIC Secretary to confirm the correct attachment with the FRP Task Group.

Update: The NBIC Secretary reached out to the project manager about the subcommittee's inquiry. He received a corrected proposal from Mr. Cowley which is attached to the agenda.

Item Number: 17-167	NBIC Location: Part 3, S3.2 d)	No Attachment

General Description: Clarify repair inspection requirements for machined only graphite parts.

Subgroup: Graphite
Task Group: Aaron Viet (PM)

July Meeting Action: Mr. Troutt reported that the proposal for this item is still being developed.

Item Number: 18-13	NBIC Location: Part 3	Attachment Page 46

General Description: Weld Methods 7 addition for dissimilar weld metal-Gr. 91.

Subgroup: SG Repairs and Alterations

Task Group: John Siefert (PM), George Galanes

July Meeting Action: Mr. Troutt introduced the item and asked Mr. George Galanes to provide additional information. Mr. Troutt reported that the proposal for this item will be sent to subcommittee letter ballot prior to the next meeting. He also requested that it be balloted to Main Committee for review and comment when the proposal is sent to subcommittee letter ballot.

Update: The proposal for this item was approved by SC R&A via letter ballot.

Item Number: 18-65	NBIC Location: Part 3, Section 3	No Attachment

General Description: Draft rules for "used" material in repairs and/or alterations.

Subgroup: SG Repairs and Alterations

Task Group: Jamie Walker – PM, Marty Toth, Pat Becker, Michael Quisenberry, Issac Osborn, Paul Shanks, R. Underwood

July Meeting Action: Mr. Troutt reported that the proposal for this item is still being developed.

Item Number: 18-66	NBIC Location: Part 3, Section 5	No Attachment

General Description: Move Report Forms to a new Supplement.

Subgroup: SG Repairs and Alterations

Task Group: Marty Toth – PM, Ben Schaefer

July Meeting Action: Mr. Troutt reported that the proposal for this item is still being developed.

Item Number: 18-75	NBIC Location: Part 3	Attachment Page 50

General Description: Flush patches in stayed and un-stayed areas of tubesheets

Subgroup: SG Repairs and Alterations

Task Group: Michael Quisenberry (PM), Kathy Moore, Marty Toth, Rick Sturm

July Meeting Action: Mr. Troutt introduced the item and asked Mr. Michael Quisenberry to speak further on the proposed changes. Mr. Troutt then requested to send this item out as a letter ballot to the Main Committee.

Update: This proposal was balloted to Main Committee. The ballot received several negative votes and comments, which can be seen on Attachment Page 50.

Item Number: 18-93	NBIC Location: Part 3, S3.2, S3.4 4.4.2 6)	No Attachment

General Description: Test Duration

Subgroup: Graphite

Task Group: J. Clements (PM)

July Meeting Action: Mr. Troutt reported that the proposal for this item is still being developed.

Update: TG Graphite voted unanimously to close this item with no action. They did so because vessels that fail the currently required 30 minute pressure test may pass a 10 minute pressure test.

Item Number: 18-94	NBIC Location: Part 3, S3.2 f), h); S3.4 a), b), c) etc.	No Attachment

General Description: G-mark Requirements for Various Repairs/Alteration to Graphite

Subgroup: Graphite

Task Group: C. Cary (PM)

July Meeting Action: Mr. Troutt reported that the proposal for this item is still being developed.

Item Number: 18-95	NBIC Location: Part 3, S1.1.4	Attachment Page 54

General Description: Revision to Part 3, S1.1.4 to account for new rules for riveted construction

Subgroup: Locomotive

Task Group: (L. Moedinger – PM)

July Meeting Action: Mr. Troutt introduced the item and asked Mr. Linn Moedinger to explain the proposed changes. Mr. Moedinger also answered clarifying questions on the wording and the publication of ASME Section I Parts PR and PL. During discussion, some revisions were suggested to better capture the intent of the proposed change. Ms. Melissa Wadkinson suggested sending the proposal back to subcommittee for further work. Mr. Troutt withdrew the proposal and will send it back for further work.

Item Number: 18-100	NBIC Location: Part 3, 3.3.2	Attachment Pages 55

General Description: Revision adding heat exchanger tubes with an outside diameter of ¾" or smaller to NBIC Part 3.3.2 Routine Repairs

Subgroup: Repairs and Alterations

Task Group: (David Martinez – PM), B. Schaefer, N. Carter

July Meeting Action: Mr. Troutt introduced the item and explained the proposed changes. A motion was made and seconded to approve the proposal as presented. Mr. Wielgoszinski suggested that this item be put on hold until ASME action is taken to approve a code case regarding this repair. Further discussion was held on putting the item on hold versus voting on it now. A vote was taken to approve the proposal, but the proposal failed to receive enough approval votes (9 approve, 6 disapprove, and 1 abstention). The members who cast disapprove votes did so because there are currently no rules or code cases in ASME BPVC that address this type of repair as it is a fairly new method. The item will be sent back to the subgroup for further work.

Item Number: 19-11	NBIC Location: Part 3, 9.1	Attachment Page 59

General Description: Clarify Definition of Authorized Nuclear Inspection Agency (ANIA)

Subgroup: Repairs and Alterations
Task Group: P. Edwards (PM)

Explanation of Need: An ANIA cannot be an Inservice AIA since Endorsements for nuclear inspectors are issued only to new construction AIA's. The requirements for qualified Authorized Nuclear Inspectors/Supervisors are clearly specified in NB-263, RCI-1. Therefore revision to the Glossary definition is needed to clarify this requirement for the NR Accreditation Program.

July Meeting Action: Mr. Troutt introduced the item and explained the change being proposed. A motion was made and seconded to approve the proposal. Mr. Scribner suggested adding language to the proposal to address authorization to make repairs and alterations. The original motion was withdrawn and a modified proposal will be sent out for letter ballot to the Main Committee prior to the next meeting.

Update: The proposal was letter balloted to Main Committee but did not receive enough approval votes to pass. There were three negative votes, which can be seen on Attachment Page 59.

Item Number: 19-16	NBIC Location: Part 3, 3.3.2 e)	Attachment Page 61

General Description: Reword to provide clarity; contradictory requirement Part 3; 3.2.2 e)

Subgroup: Repairs and Alterations
Task Group: T. White (PM)

Explanation of Need: This wording of this clause is causing confusion. The original submitter has had multiple instances where owners have requested to purchase welded replacement parts directly and read this clause with the belief that they can purchase a replacement part for in some cases a welded pressure part for an ASME Section I boiler and safe money by having the fabricator not Hydro test as per Section I even when it was not impractical to have the testing performed.

July Meeting Action: Mr. Troutt reported that the proposal for this item is still being developed.

Item Number: 19-19	NBIC Location: Part 3, S4.2	Attachment Page 62

General Description: Reword to provide clarity; contradictory requirement Part 3; 3.2.2 e)

Subgroup: FRP
Task Group: None assigned

Explanation of Need: The current use of the term "inspector" in S4.2 does not mean a Commissioned Inspector as defined in Section 9. Clarification is needed.

July Meeting Action: Mr. Troutt introduced the item and requested that it be sent out for letter ballot to the Main Committee. The item was approved unanimously at the subcommittee level.

Update: This item will be up for letter ballot to Main Committee prior to the January meeting.

Item Number: 19-27	NBIC Location: Part 3, S2.13.14.3-a	Attachment Page 64

General Description: Fusible Plug Repair Using Half Coupling Figure

Subgroup: SG Historical

Task Group: Joel Amato - PM

July Meeting Action: Mr. Troutt introduced the item and explained the change being proposed. A motion was made and seconded to approve the proposal as presented. After discussing the proposal, the committee felt that the item should be sent to letter ballot to allow for more time to consider the proposed changes.

Update: This item will be up for letter ballot to Main Committee prior to the January meeting.

Item Number: 19-55	NBIC Location: Part 3, 4.4.2 a) 1)	Attachment Page 65

General Description: Change the maximum test pressure requirement when performing liquid pressure tests of repair activities.

Subgroup: Repairs and Alterations
Task Group: Robert Underwood – PM

Explanation of Need: To change the maximum test pressure requirement when performing liquid pressure tests of repair and alteration activities. This proposal was initially part of item NB16-2603, which proposed changes to 4.4.1 a) 1) and 4.4.2 a) 1). However, only the changes to 4.4.1 a) 1) made it into the 2019 NBIC.

July 2019 Meeting Action: Mr. Underwood presented to Subcommittee R&A and the motion to accept the proposal was made, seconded, and unanimously approved by the subcommittee.

Update: This item will be up for letter ballot to Main Committee prior to the January meeting.

iv. New Items:

Item Number: 19-59	**NBIC Location: Part 3, 3.2.2 e)**	**Attachment Page 67**

General Description: Pressure Tests for Replacement Parts

Subgroup: Repairs and Alterations

Task Group: Paul Edwards – PM

Explanation of Need: ASME has issued interpretation I-16-1 and revised PW-54 to clarify that Section I does not contain requirements for the hydrostatic testing of replacement parts. Based on this, the language in 3-3.2.2 e) "… as required by the original code of construction" could be interpreted to mean that pressure testing of parts is not required because Section I does not require testing of replacement parts. On review, this was not the Committee's intent when clause e) was added to 3.2.2. The proposed intent interpretation and a supporting text revision is provided to clarify this issue. By linking the words "original code of construction" to the test pressure, it eliminates the potential interpretation that testing is only required when the original code of construction specifically requires testing of replacement parts.

Item Number: 19-60	**NBIC Location: Part 3, 1.5.1**	**No Attachment**

General Description: Quality System For Qualification For The National Board "R" Certificate

Subgroup: Repairs and Alterations

Task Group: None assigned.

Explanation of Need: Part 3, 1.5.1 provides a good outline for a Quality Systems Manual. However, the remaining elements of a Quality System, outside of the one's currently being addressed in Item 19-47 and 19-4 need to be embellished to provide a more auditable description of each element.

Item Number: 19-61	**NBIC Location: Part 3, 3.3.4**	**No Attachment**

General Description: Quality System For Qualification For The National Board "R" Certificate

Subgroup: Repairs and Alterations

Task Group: None assigned.

Explanation of Need: Threaded insert are being used to fix a bolt that has broken off on certain types of boilers (autoclaves) which hold the heating elements in the water side of the boiler. When this happens, the technician correcting the problem will simply drill out the broken bolt with an over sized bit and inset a metallic insert. NBIC does address this this type of alteration.

Item Number: 19-68	**NBIC Location: Part 3, 1.6**	**No Attachment**

General Description: Quality System For Qualification For The National Board "R" Certificate

Subgroup: Repairs and Alterations

Task Group: None assigned.

Explanation of Need: Review of 1.6 for possible requirement for ANI's and ANII's to hold the (R) Endorsement for "NR" activities.

Item Number: 19-69	NBIC Location: Part 3, 5.12.5.1 8) & 5.12.5.1 11)	No Attachment

General Description: Review verbiage in Part 3, 5.12.5.1 8) and 5.12.5.1.11)

Subgroup: Repairs and Alterations

Task Group: Ben Schaefer - PM

Explanation of Need: Review verbiage in Part 3, 5.12.5.1 8) and 5.12.5.1.11) to include "Code Case" and "Code Edition" within the text.

Item Number: 19-73	NBIC Location: Part 3, S3	No Attachment

General Description: Requirements for who can make hole plugging repairs on graphite blocks

Subgroup: Graphite
Task Group: C. Cary (PM), A. Viet, A. Stupica

Explanation of Need: Performing hole plugging repairs in graphite blocks is a common repair for graphite pressure vessels, but the NBIC currently has no formal requirements for this type of repair.

Item Number: 19-74	NBIC Location: Part 3, S3.3	No Attachment

General Description: Routine repair requirements for partial nozzle replacement

Subgroup: Graphite
Task Group: A. Stupica (PM), M. Bost

Explanation of Need: Currently only nozzle replacement is addressed as a routine repair. The group is planning on defining the types of partial nozzle replacements and repairs that could be defined as routine.

Item Number: 19-82	NBIC Location: Part 3, 1.5.1 j)	Attachment Page 69

General Description: Review verbiage in Part 3, 5.12.5.1 8) and 5.12.5.1.11)

Subgroup: Repairs and Alterations

Task Group: None assigned.

Explanation of Need: Safety is not addressed in Part 3. This verbiage could be added to the 1.5.1 j) Method of Performing Work paragraph so Certificate Holders can address the safety concerns specific to their scope of activities.

Item Number: 19-91	NBIC Location: Part 3, 5.6	Attachment Page 70

General Description: Form Registration Log

Subgroup: Repairs and Alterations
Task Group: None assigned.

Explanation of Need: Many "R" Certificate Holders now register R Forms in the National Board Electronic Data Transfer (EDT) System. The EDT system contains all of the required log information listed in paragraph 5.6 of Part 3, which makes it unnecessary and redundant for the "R" Cert. Holder to maintain a separate log.

Item Number: 19-92	NBIC Location: Part 3, 1.5.1 j)	No Attachment
General Description: Adding "Document Designation" as the second column title in Table 2.3 **Subgroup:** Repairs and Alterations **Task Group:** Jim Sekely – PM **Explanation of Need:** This change is being requested so that NBIC matches the naming used by AWS.		

b. Subcommittee Pressure Relief Devices

i. Interpretations

ii. Action Items – Old Business

Item Number: NB12-0901	NBIC Location: Part 4	No Attachment
General Description: Prepare a guide for repair of tank vents **Task Group:** B. Donalson (PM), D. DeMichael, K. Simmons, K. Beise, B. Nutter, J. Little, S. Artrip **July Meeting Action:** Ms. Brodeur reported that a proposal is in development for this item.		

Item Number: NB14-0602B	NBIC Location: Part 2	No Attachment
General Description: Improve index in Part 2 relating to pressure relief devices **Task Group:** D. Marek (PM), B. Donalson, D. DeMichael, B. Hart **July Meeting Action:** Ms. Brodeur reported that a proposal is in development for this item.		

Item Number: NB15-0108B	NBIC Location: Part 1	No Attachment
General Description: Address pressure relief devices in new supplement on high temperature hot water boilers **Task Group:** D. Marek (PM), A. Renaldo , D. McHugh, B. Nutter, A. Cox, D. Schirmer **July Meeting Action:** Ms. Brodeur reported that a proposal is in development for this item.		

Item Number: NB15-0305	NBIC Location: Part 4	No Attachment
General Description: Create Guidelines for Installation of Overpressure Protection by System Design. **Task Group:** B. Nutter, A. Renaldo, D. Marek (PM), D. DeMichael **July Meeting Action:** Ms. Brodeur reported that a proposal is in development for this item.		

Item Number: NB15-0307	NBIC Location: Part 4	No Attachment

General Description: Create Guidelines for Repair of Pin Devices.

Task Group: D. McHugh (PM), A. Renaldo, T. Tarbay, R. McCaffrey

July Meeting Action: Ms. Brodeur reported that a proposal is in development for this item.

Item Number: NB15-0308	NBIC Location: Part 4	No Attachment

General Description: - Create Guidelines for Installation of Pressure Relief Devices for Organic Fluid Vaporizers.

Task Group: T. Patel (PM), K. Beise, B. Nutter

July Meeting Action: Ms. Brodeur reported that this item is on hold pending ASME Section I committee action on a related item.

Item Number: NB15-0315	NBIC Location: Part 4, 2.5.6 and 2.6.6 and Part 1, 4.5.6 and 5.3.6	No Attachment

General Description: Review isolation Valve Requirements, and reword to allow installation of pressure relief devices in upstream piping.

Task Group: D. DeMichael (PM), B. Nutter, A. Renaldo, D. Marek

July Meeting Action: Ms. Brodeur reported that a proposal is in development for this item.

Item Number: NB15-0321	NBIC Location: Part 4, 3.2.5 a) and Part 2, 2.5.7 a)	Attachment Page 71

General Description: Review testing requirements for in-service testing of pressure relief devices

Task Group: A. Cox, A. Renaldo (PM), D. Marek, S. Irvin, D. DeMichael, B. Nutter, J. Ball

July Meeting Action: Ms. Brodeur reported that a proposal for this item will be balloted to the subcommittee after the meeting.

Update: The proposal was balloted to SC PRD after the July meeting and was approved by the SC.

Item Number: NB15-0324	NBIC Location: Part 4	Attachment Page 75

General Description: Create Guidelines for Inspection and Testing Frequencies with respect to shelf life and storage of pressure relief valves.

Task Group: A. Rendaldo (PM), B. Nutter, K. Simmons, D. Marek, J. Little

July Meeting Action: Ms. Brodeur reported that a proposal for this item will be balloted to the subcommittee after the meeting.

Item Number: NB16-0805	**NBIC Location: Part 4, 2.6.6 and Part 1, 5.3.6**	**Attachment Page 83**
General Description: Temperature ratings for discharge piping and fittings **Task Group:** A. Renaldo (PM), T. Patel, D. Marek **July Meeting Action:** Ms. Brodeur reported that a proposal for this item will be balloted to the subcommittee after the meeting. **Update:** Item was approved by SC PRD via letter ballot.		

Item Number: 17-115	**NBIC Location: Part 4, Section 2**	**No Attachment**
General Description: Complete rewrite of Section 2 combining common requirements into a general requirements section for all pressure relief devices and look at combining with 2.4.3, 2.4.4. **Task Group:** A. Renaldo (PM), D. McHugh, D. Marek **July Meeting Action:** Ms. Brodeur reported that a proposal is in development for this item.		

Item Number: 17-119	**NBIC Location: Part 4, 2.2.5 and Part 1, 2.9.1.4**	**No Attachment**
General Description: States pressure setting may exceed 10% range. Clarify by how much. **Task Group:** T. Patel (PM), D. Marek **July Meeting Action:** Ms. Brodeur reported that this item is on hold pending ASME committee action on a related item.		

Item Number: 17-128	**NBIC Location: Part 4, 2.4.4.3 and Part 1, 3.9.4.3**	**No Attachment**
General Description: allows Y-base to be used while 2.4.1.6 a) prohibits. This appears to be a conflict. **Task Group:** B. Nutter (PM), S. Irvin **July Meeting Action:** Ms. Brodeur reported that this item is on hold pending ASME committee action on a related item.		

Item Number: 17-132	**NBIC Location: Part 4, 3.2.6 and Part 2, 2.5.8**	**No Attachment**
General Description: Paragraph 3.2.6 can be put into tabular format. Review test frequencies. **Task Group:** B. Nutter (PM), M. Brodeur, D. Marek, D. DeMichael, A. Cox, P. Dhobi, R. McCaffrey, T. Beirne **July Meeting Action:** Ms. Brodeur reported that a proposal is in development for this item.		

Item Number: 18-73	NBIC Location: Part 4, 2.3 and Part 1, S5.7.6	Attachment Page 85

General Description: Update installation requirements for Thermal Fluid Heaters

Task Group: T. Patel (PM), B. Nutter

July Meeting Action: Ms. Brodeur reported that a proposal has been made and approved by the subgroup and subcommittee. She requested that it be sent to the Main Committee as a letter ballot.

Update: Item was approved by both subgroup and subcommittee via letter ballot and is awaiting review by main committee.

Item Number: 18-80	NBIC Location: NBIC Location: Part 4, S3.1, S4.1, S6.1	Attachment Page 90

General Description: Addition of a "Scope" section to Part 4, S3.1, S4.1, and S6.1 to stay consistent with other sections

Task Group: T. Patel (PM), A. Renaldo, K. Simmons, P. Dhobi

July Meeting Action: Ms. Brodeur reported that the item will be balloted to the subgroup and subcommittee prior to the next meeting.

Item Number: 19-1	NBIC Location: Part 4, 4.8.5.4 & 4.8.6.1	No Attachment

General Description: Develop specific content and scope of annual field audits.

Task Group: A. Donaldson (PM), D. Marek, A. Cox, P. Dhobi, M. Brodeur, T. Patel

July Meeting Action: Ms. Marianne Brodeur reported that the item was changed from an interpretation request to an action item for code revision as the subcommittee felt this request fit the definition of a code revision. The general description was revised and a task group was formed to develop a proposal.

Item Number: 19-2	NBIC Location: Part 4, 4.9.1	No Attachment

General Description: Additional Training Requirements for VR and T/O programs

Task Group: A. Donaldson (PM), A. Cox, B. Donaldson, D. Marek, J. Simms

Explanation of Need: This was discussed at the July 2018 meetings and the SG and SC both agreed that we should look to expand the training program requirements. During the Development of the T/O code language in Part 4, the task group identified a lack of training requirements included in the new section. Upon further investigation, it was determined that the T/O requirements were copied directly from the V/R requirements.

July Meeting Action: Ms. Brodeur reported that this is a newly received item and a TG has just been formed. A proposal is in development for this item.

Item Number: 19-18	NBIC Location: Part 4, 4.8.5.4 n) 5)	No Attachment

General Description: Implementation of QC Manual Revisions

Task Group: A. Donaldson (PM)

Explanation of Need: Current wording allows for implementation of the revision once the change is merely submitted to the National Board for approval. When changes are made to a QC Manual at times other than reviews, they may be done so by submission to NB via mail, email etc. But implementation of the change should not take place until after NB acceptance of the change is received.

July Meeting Action: Ms. Brodeur reported that this is a newly received item and a TG has just been formed. A proposal is in development for this item.

Item Number: 19-37	NBIC Location: Part 4, 4.3.1 c) 4)	No Attachment

General Description: Origin of Replacement Parts for Pressure Relief Devices

Task Group: A. Cox (PM), T. Patel, P. Dhobi, J. Simms
Explanation of Need: VR Holders are required to obtain a Certificate of Compliance when they purchase Replacement Critical Parts from longtime PRV Manufacturer's Representatives. This is prevalent in the Midstream Oil & Gas Sector. Several small VR Holders in this Sector of the Energy Industry have expressed their desire to make this issue less cumbersome because the Manufacturers of the majority of PRVs they repair do not have Assemblers.

July Meeting Action: Ms. Brodeur reported that this is a newly received item and a TG has just been formed. A proposal is in development for this item.

Item Number: 19-40	NBIC Location: Part 4, Figure 4.7.2-b	Attachment Page 95

General Description: Move Fig. 4.7.2-b to Part 4 Supplement 6.

Task Group: T. Beirne (PM)

Explanation of Need: Figure 4.7.2-b should be relocated to Supplement 6. Requirement for marking repairs of Nuclear Valves in accordance with figure 4.7.2-b also does not exist. A statement should be added to Supplement 6 regarding the requirement to mark the repaired nuclear valve in accordance with the relocated Figure 4.7.2-b.

July Meeting Action: Ms. Brodeur reported that this is a newly received item and a TG has just been formed. A proposal for this item will be balloted to the subgroup prior to the next meeting.

Item Number: 19-41	NBIC Location: Part 4, 4.7.5	Attachment Page 100

General Description: Review Part 4, Paragraph 4.7.5 and simplify

Task Group: T. Beirne (PM), A. Cox, D. Schirmer
Explanation of Need: The requirements of adding a duplicate nameplate are the same whether the original nameplate is illegible or missing. 4.7.5 could be simplified with the three sub-paragraphs being combined into one paragraph.

July Meeting Action: Ms. Brodeur reported that this is a newly received item and a TG has just been formed. A proposal is in development for this item.

iii. New Items:

Item Number: 19-54	**NBIC Location: Part 4, 3.3.4 c) & S7.2 f) 1)**	**Attachment Page 113**

General Description: Reconcile Conflict regarding Sealing Adjustments of PRVs in T/O Program

Task Group: None assigned.

Explanation of Need: S7 is needed to give T/O Organizations procedural guidance for implementation of T/O requirements in Part 4, Section 3. Such guidance needs to agree with the requirements of Part 4, Section 3. The Term "all external adjustments" is taken from ASME Original Code of Construction where is most certainly applies. However, in implementation of T/O, only one of several possible external adjustments may need to be made. The T/O Seals indicate which of the possible adjustments was made.

Item Number: 19-70	**NBIC Location: Part 4, 2.6.3**	**Attachment Page 114**

General Description: Part 4, 2.6.3 references 2.1 through 2.2. Should be 2.2 through 2.4

Task Group: T. Beirne (PM),

Explanation of Need: Paragraph 2.6 and sub-paragraphs apply to pressure relief valves installed in piping. Paragraph 2.6.3 references 2.1 through 2.2 as the exceptions. However it should reference 2.2 through 2.4. This would match the exceptions in the duplicated paragraph in Part 1 (Part 1 paragraph 5.3.3).

Item Number: 19-71	**NBIC Location: Part 4, 4.9.2 & 4.9.3**	**No Attachment**

General Description: Use of Personnel from another VR Certificate Holder to perform VR Repairs

Task Group: None
Explanation of Need: NBIC SCPRD needs to address the practice of sub-contracted personnel between VR Holders. In order to maintain Quality Standards, the responsible VR Holder must verify the qualifications all personnel and maintain records per NBIC Part 4, Table 4.8.5.4 s)

Item Number: 19-72	**NBIC Location: Part 4, 4.6.2**	**Attachment Page 115**

General Description: Documentation of Steam tested on Air Correction Factor

Task Group: None assigned.

Explanation of Need: An ASME Code change in the 2019 Edition of Sec VIII-1 has made it impossible for an Owner/User VR Holder to use the CDTP Field of the VR Nameplate to document the Manufacturer's Correction Factor for a Steam Service PRV tested on Air as permitted by NBIC Part 4, Sec 4.6.2. When an Owner/User applies the aforementioned factor, it needs to be documented for the repair history of the PRV to ensure an accurately set PRV.

Item Number: 19-75	NBIC Location: Part 4, 2.2.2	Attachment Page 116

General Description: Add PRD requirements for boilers up to 4000lb/hr to Part 4

Task Group: T. Beirne (PM)

Explanation of Need: Item 19-51 makes this proposed change to Part 1, 2.9.1.1, but the proposal never included changes to the duplicate section in Part 4. This item will ensure that the approved language for Part 1 gets reflected in Part 4.

Item Number: 19-76	NBIC Location: Part 4, 3.3.3.4 p)	Attachment Page 117

General Description: Paragraph 3.3.3.4 p) Incorrect Certificate of Authorization Reference

Task Group: None assigned.

Explanation of Need: Referenced paragraph refers to "VR" Certificate of Authorization for record retention. It should refer to "T/O" Certificate of Authorization since this is in the T/O quality elements section.

Item Number: 19-83	NBIC Location: Part 4, 4.7.5	No Attachment

General Description: Address Alternate Pressure Relief Valve Mounting Permitted by ASME CC2887-1

Task Group: None assigned.

Explanation of Need: ASME Code Case 2887-1 permits the installation of pressure relief valves below a low mass water tube boiler or water heater under certain conditions. This set of conditions and alternate location should be addressed in the NBIC as the use of low mass water tube boilers and water heaters becomes more widespread.

Item Number: 19-85	NBIC Location: Part 4, 2.3.6 j)	No Attachment

General Description: Thermal Fluid Heaters

Task Group: None

Explanation of Need: Thermal Fluid heaters with no change of phase are not specifically addressed in 2.3.6 j).

c. Subcommittee Installation

i. Interpretations

ii. Action Items – Old Business

Item Number: NB11-1901	NBIC Location: Part 1	Attachment Page 118

General Description: Add guidance for the safe installation of high pressure composite pressure vessels operating in close proximity to the public

Subgroup: FRP

Task Group: R. Smith (PM), M. Richards, S. Konopacki, D. Patten and E. Wiggins

July Meeting Action: Ms. Melissa Wadkinson introduced the item and asked Mr. Rex Smith to explain the changes being proposed. After MR. Smith went over the proposal, Ms. Wadkinson requested the item be sent to letter ballot for the Main Committee. Mr. Venus Newton suggested it be sent to subcommittee PRD before being sent to Main Committee as part of the proposal deals with pressure relief devices. The committee agreed with this suggestion and the item will be balloted to Subcommittee PRD before sending it to Main Committee.

Update: This item was balloted to SC PRD for review and comment. The ballot received a few comments which can be seen on Attachment Page 118.

Item Number: NB16-0102	NBIC Location: Part 1	Attachment Page 126

General Description: Address post installation pressure testing

Subgroup: Installation

Task Group: S. Konopacki (PM), E. Wiggins, P. Cole, R. Smith, M. Wadkinson, D. Patten

July Meeting Action: Ms. Wadkinson introduced the item and discussed updates made to the proposal since the last meeting. She then requested that it be sent out for letter ballot to the Main Committee.

Update: The proposal was balloted to Main Committee but failed to receive enough approval votes. Ballot comments can be seen on Attachment Page 126.

Item Number: 18-2	NBIC Location: Part 1	No Attachment

General Description: Result of NB16-0101, add verbiage regarding commissioning fired boilers & fired pressure vessels with a calibrated combustion analyzer.

Subgroup: SG Installation

Task Group: E. Wiggins (PM), D. Patten, P. Schuelke, M. Wadkinson, and G. Halley

January 2019 Meeting Action: Progress Report – The TG continues to discuss the commissioning of new equipment for proper combustion.

July Meeting Action: Ms. Wadkinson reported that a proposal is being developed for this item.

Item Number: 18-57	NBIC Location: Part 1	No Attachment

General Description: address the use & definition of the word inspector

Subgroup: SG Installation
Task Group: Brian Moore (PM), R. Smith, T. Griffin, P. Jennings, T. Creacy and R. Spiker

July Meeting Action: Ms. Wadkinson reported that a proposal is being developed for this item.

Item Number: 19-45	NBIC Location: Part 1, S1	No Attachment

General Description: Revisions to Yankee Dryer Supplement Wording in Part 1

Subgroup: SG Installation

Task Group: R. Spiker (PM), J. Jessick, and D. Patten

July Meeting Action: Ms. Wadkinson reported that a proposal is being developed for this item.

Item Number: 19-49	NBIC Location: Part 1, 2.9 & 3.9	Attachment Page 130

General Description: Ensure shipping plugs for PRDs are removed during the installation process

Subgroup: Installation
Task Group: R. Smith (PM) and S. Konopacki

Explanation of Need: From the January 20 19 main committee meeting, the discussion of PRD Ite m NB17-0401 led to the decision to open an item to address requirements to remove any shipping caps or plugs from pressure relief devices during the installation process.

July Meeting Action: Proposal - The proposal was approved unanim ously by SC Installation at the July meeting. However, Main Committee decided to send the proposal back to t he subgroup to include language on "wired shut" lifting levers as they are often found still attached after installation.

iii. Action Items – New Business

Item Number: 19-77	NBIC Location: Part 1, 1.4.5.1.1	Attachment Page 131

General Description: NBIC Part 1, 1.4.5.1.1 Guide for installation report, items 6, 10, and 20

Subgroup: SG Installation

Task Group: None

Explanation of Need: Cast aluminum boilers have been incorporated in ASME Section IV for a number of years now and it's time they be recognized in the NBIC. The installation report and gui de were developed prior t o cast aluminum boilers beco ming an offi cial part of ASME Section IV. It' s suggested the guide ite m numbers and associated areas of the installation report be revised to incorporate cast aluminum boilers.

d. Subcommittee Inspection

i. Interpretations

ii. Action Items – Old Business

Item Number: NB16-1401	NBIC Location: Part 2, S10	Attachment Page 133

General Description: Revise and update Supplement 10 on Inspection of CRPVs

Subgroup: FRP

Task Group: N. Newhouse (PM)

July 2019 Meeting Action: Mr. Jim Getter introduced the item and announced that the subcommittee voted to send the proposal back to the FRP task group to clean up the proposal.

Item Number: NB16-1402	NBIC Location: Part 2, New Supplement	Attachment Page 153

General Description: Life extension for high pressure FRP vessels above 20 years

Subgroup: FRP
Task Group: M. Gorman (PM)

Background:
In 2016, when this item was first opened, it was assigned as an item for Part 3. Recent discussions with SC R&A and the FRP Task Group have revealed that this item is better suited for Part 2. This item has been approved by the FRP Task Group.

Scope: The goal of this proposal is to provide a method to evaluate whether the service life of high pressure fiber reinforced plastic pressure vessels can be extended for an additional lifetime.

Item Number: 18-6	NBIC Location: Part 2, S1.4.2.9	No Attachment

General Description: Riveted stay bolt dimensions

Subgroup: Locomotive

Task Group: M. Janssen (PM)

July 2019 Meeting Action: Mr. Getter announced that work is being done to develop a proposal for this item.

Item Number: 18-43	NBIC Location: Part 2, Section 5	No Attachment

General Description: Permanent nameplate removal from pressure vessel being removed from service

Subgroup: Inspection

Task Group: J. Roberts (PM), J. Burgess, J. Calvert, T. Shernisky, J. Clark, M. Sansone

July 2019 Meeting Action: Mr. Getter announced that work is being done to develop a proposal for this item for the next meeting.

Item Number: 18-62	NBIC Location: Part 2, S12.5	No Attachment

General Description: Remote Visual Inspection Requirements

Subgroup: Inspection

Task Group: V. Newton (PM), M. Horbaczewski, B. Wilson, J. Calvert, J. Castle, D. Graf, T. Shernisky

July 2019 Meeting Action: Mr. Getter announced that work is being done to develop a proposal for this item.

Item Number: 18-63	NBIC Location: Part 2	No Attachment

General Description: Review inspection requirements for pressure vessels designed for high pressures

Subgroup: Inspection

Task Group: T. Shernisky (PM), J. Mangas, J. Peterson, and J. Castle

July 2019 Meeting Action: Mr. Getter announced that work is being done to develop a proposal for this item.

Item Number: 19-6	NBIC Location: Part 2, 2.3.6.8	No Attachment

General Description: PVHO 2.3.6.8 Add other types of PVHO's

Subgroup: Inspection

Task Group: D. Buechel (PM), R. Smith, S. Reimers, J. Burgess, M. Mooney & D.LeSage

Explanation of Need: Currently part 2 only covers medical PVHO's.

July 2019 Meeting Action: Mr. Getter announced that work is being done to develop a proposal for this item.

Item Number: 19-7	NBIC Location: Part 2	No Attachment

General Description: Pressure Gage Graduation

Subgroup: Inspection

Task Group: V. Newton (PM), D. Buechel, D. Rose, D. Graff, & J. Clark

Explanation of Need: This item was opened after discussion of the pressure gage for PVHO's. The SG Inspection decided they needed to look into the pressure gage graduation for other pressure retaining items beyond PVHO's.

July 2019 Meeting Action: Mr. Getter announced that work is being done to develop a proposal for this item.

Item Number: 19-8	NBIC Location: Part 2, 2.3.6.8	No Attachment

General Description: Clarification of gage requirements for PVHO

Subgroup: Inspection

Task Group: D. Buechel (PM) & R. Smith , V. Newton

Explanation of Need: Existing PVHO gages do not conform to current NBIC and ASME Standards as written.

July 2019 Meeting Action: Mr. Getter announced that work is being done to develop a proposal for this item.

Item Number: 19-22	NBIC Location: Part 2, S2	No Attachment

General Description: Review of MAWP on Return Flue Boilers.

Subgroup: SG Historical
Task Group: M. Wahl (PM), J. Amato, R. Bryce & D. Rose

Explanation of Need: From the Presentation, by Robert Bryce, the subcommittee feels this needs to be reviewed more in-depth. Continue the research and documentation on the MAWP of Return Flue Boiler. This was started with the documentation presented by Robert Bryce which is located in the NBIC cloud under January 2019 Historical Subcommittee.

July 2019 Meeting Action: Mr. Getter announced that work is being done to develop a proposal for this item.

Item Number: 19-46	NBIC Location: Part 2, S5	No Attachment

General Description: Revisions to Yankee dryer supplement in Part 2 (Scope)

Subgroup: Inspection

Task Group: None assigned

Explanation of Need: Various parts of supplement 5 do not match their counterparts in Part 1, Supplement 1.

July Meeting Action: Mr. Getter announced that the scope of this has been split into multiple items. Item 19-46 will have a revised scope, and items 19-63, 19-64, and 19-65 were opened to address different parts of the original proposal.

Item Number: 19-63	NBIC Location: Part 2, S5.2	No Attachment

General Description: Changes to the Yankee Dryer Supplement (ASSESSMENT OF INSTALLATION)

Subgroup: Inspection
Task Group: V. Newton (PM), T. Barker, D. Lesage, J. Jessick

Explanation of Need: Ensure that wording in Part 2, S5.2, is identical to that found in Part 1, S1.2. Note that wording will be the same, but paragraph numberings will be different.

July 2019 Meeting Action:
A task group was assigned. This group will work with Part 1 to make sure the paragraph "ASSESSMENT
OF INSTALLATION", in the supplements on Yankee Dryers in Part 1 and Part 2 both read the same.

Item Number: 19-64	NBIC Location: Part 2, S5.2.1	No Attachment

General Description: Changes to the Yankee Dryer Supplement (DETERMINATION OF ALLOWABLE
OPERATING PARAMETERS)

Subgroup: Inspection

Task Group: V. Newton (PM), T. Barker, D. Lesage

Explanation of Need: Ensure that wording in Part 2, S5.2.1, is identical to that found in Part 1, S1.3. Note that wording will be the same, but paragraph numberings will be different.

July 2019 Meeting Action:
A task group was assigned. This group will work with Part 1 to make sure the paragraph "DETERMINATION OF ALLOWABLE OPERATING PARAMETERS", in the supplements on Yankee
Dryers in Part 1 and Part 2 both read the same.

iii. New Items:

Item Number: 19-78	NBIC Location: Part 2, 2.2.12.1 a)	Attachment Page 158

General Description: Detailed Requirements for Inservice Inspection of Cast Iron Boilers.

Subgroup: Inspection

Task Group: None assigned

Explanation of Need: The only reference to cast iron material in ASME Section I is PMB-5.4 that allows heads or parts of miniature boilers, when not exposed to direct action of the fire, may be made of cast iron or malleable iron provided it complies with a specification permitted by Section I. Heads and parts do not make up the complete boiler. ASME Section VIII Div. 1, UCI-2 states that cast iron boilers shall not be used in direct firing applications or in unfired steam boilers.

Item Number: 19-80	NBIC Location: Part 2, 2.2.10.6 l) 1)	Attachment Page 161

General Description: Conflicting statements in Part 1 and Part 2 about boiler controls

Subgroup: Inspection

Task Group: None assigned

Explanation of Need: Requirements in this section need to be consistent with Part 1, 2.8.4 a) to avoid confusion.

Item Number: 19-84	NBIC Location: Part 2, S2.10.7	Attachment Page162

General Description: Inspecting riveted joints for failure

Subgroup: SG Historical

Task Group: None assigned

Explanation of Need: The text covers cracks parallel to a longitudinal joint, but there is no text covering inspection of plate material around a rivet.

Item Number: 19-88	NBIC Location: Part 2, 2.2.12.7 c) 2)	Attachment Page 168

General Description: At NBIC Part II propose the following be added to Thermal Fluid Heater

Subgroup: Inspection

Task Group: None assigned

Explanation of Need: These items are essential to preventing catastrophic loss and are low cost items.

Item Number: 19-89	NBIC Location: Part 2, S2.7.3.2	No Attachment

General Description: Longer NDE cycle for historic boilers

Subgroup: SG Historical
Task Group: None assigned

Explanation of Need: The National Historic Boiler Association (NHBA) of Canada is the association of Canadian historical boiler associations.
The NHBA is submitting a request for change to the National Board Subgroup, Historical Boilers, to review and extend the current NDE cycle for historical boilers that is defined in Part 2, S2.7.3.2. The duration is currently shorter than other jurisdictions.

- TSSA of Ontario, Canada enforced a 10-year cycle on ultrasonic thickness testing on historical boilers after careful review of recurring NDE results and operating logs from various historical boilers in that province.
- England is reportedly also on a 10-year cycle.

Extending the NBIC NDE cycle to 10 years would reduce costs for owners in jurisdictions where NBIC is being strictly followed. If granted the opportunity, the NHBA has data to support this request.

Item Number: 19-90	NBIC Location: Part 2	No Attachment
General Description: Request NBIC Part II add guidance for inspection for high pressure vessels **Subgroup:** Inspection **Task Group:** None assigned **Explanation of Need:** No guidance currently exists and the vessels are becoming more prevalent. Guidance is needed on how to inspect and NDE. A general review of cyclical designs and required documentation and relief protection also needed.		

11. Liaison Activities

a. American Society of Mechanical Engineers BPV Code (ASME BPV)

i. Mr. Paul Edwards to report.

b. American Welding Society (AWS)

i. Mr. Jim Sekely to report.

12. Future Meetings

- July 13th-16th, 2020 – Louisville, KY
- January 11th -14th, 2021 – TBD

13. Adjournment

Respectfully submitted,

Jonathan Ellis

Jonathan Ellis
NBIC Secretary

Contents

MC roster 1
ALFRED DONALDSON 2-14-18 2
Thakor Patel Resume 12-10-19 6
Randy Austin Resume 2018 (1) 8
SC 3 Attachments 10
- INT 19-5 Draft Proposal 7-17-19 Morelock (1) 10
- Inter 19-10 - Moore - 7-17-19 13
- NBIC Proposed Interpretation 19-25_Siefert rev 0 (2) 15
- Item 19-26 - Shanks - 7-17-19 rev.4 20
- NBIC Interpretation 19-34 - Hellman - 7-15-19 (2) (2) 22
- 19-36 Routine Repair of VIII Div 2 and Div 3 PV - Rev 2 25
- INT - Item 19-42 (1) 28
- INT - Item 19-62 29
- INT - Item 19-66 30
- INT - Item 19-67 31
- INT - Item 19-86 32
- INT - Item 19-87 34
- NB15-1405 revision to NBIC - history (2) (1) 35
- NB16-1403-190514 (1) 41
- SG FRP Item 17-137 44
- Item 18-13 - Siefert - rev 3 (1) 46
- Item 18-75 - with MC ballot comments 50
- Item 18-95 - Hellman - 7-18-19 54
- 18-100 rev4 - Martinez -7-16-19 (1) 55
- Item 19-11 - ANIA Definition revision with MC Ballot comments 59
- Item 19-16 - White - 7-16-19 (3) 61
- Item 19-19 - Hellman - 7-17-2019 62
- Item 19-27 - Metzmaier - 190715 (1) 64
- Item 19-55 - Underwood - 7-17-19 65
- Item 19-59 67
- Item 19-82 - Hellman - 11-8-19 69
- Item 19-91 70

SC PRD Attachments 71
- NB-15-0321 AMR comments 7-16-19 SG Pass LB to SC 71
- nb15-0324 amr edits 7-16-19 SG Pass LB to SC 75
- NB16-0805 SG Approved 7-16-19 SG Pass LB to SC 83

NB 18-73 Thermal Fluid Heaters Revision Part 4 AND Part 1 - 7-17-19 85
18-80 Proposal 9-30-19 90
Item 19-40 Proposal 7-25-19 95
Pages from 2019NBICPart4-2 95
4.7.2 REPAIR NAMEPLATE 95
FIGURE 4.7.2-a 95
EXAMPLE LAYOUT OF REQUIRED MARKINGS FOR REPAIR OF ASME/ NATIONAL BOARD “V,” “UV,” AND “HV”- STAMPED PRESSURE RELIEF VALVES 95
FIGURE 4.7.2-b 96
REQUIRED MARKINGS FOR REPAIR OF NUCLEAR PRESSURE RELIEF VALVES 96
4.7.3 CHANGES TO ORIGINAL PRESSURE RELIEF VALVE NAMEPLATE INFORMATION 96
4.7.4 REPLACEMENT OF ILLEGIBLE OR MISSING NAMEPLATES 96
Item 19-40 Proposal 7-8-19 97
FIGURE 4.7.2-bS6.5-a 99
19-41 Proposal 8-12-19 100
19-49 Smith 07-16-19 (1) 112
Item 19-54 113
Item 19-70 proposal 114
Item 19-72 115
Item 19-75 Proposal 10-4-19 116
Item 19-76 117
SC 1 Agenda Attachments 118
NB11-1901 Smith 07-16-19 R1 with PRD comments 118
NB16-0102 Konopacki 07-16-19 rev2 with MC ballot comments 126
19-49 Smith 07-16-19 (1) 130
Item 19-77 131
SC 2 Attachments 133
NB16-1401 - NN181018 133
Item NB16-1402 - Gorman (2) 153
Item 19-78 158
Cast Iron - 19-78 159
Item 19-80 161
Item 19-84 - Inspecting Riveted Joints 162
Item 19-88 168

NBIC Main Committee

Last Name	First Name	Interest Category	Role	Exp. Date	More
Wielgoszinski	Robert	Authorized Inspection Agencies	Chair	08/30/2021	Details
Galanes	George	Users	Vice Chair	01/30/2022	Details
Ellis	Jonathan		Secretary	12/30/2099	Details
Amato	Joel	Jurisdictional Authorities	Member	08/30/2021	Details
Brodeur	Marianne	National Board Certificate Holders	Member	10/30/2022	Details
Edwards	Paul	National Board Certificate Holders	Member	08/30/2021	Details
Getter	Jim	Manufacturers	Member	01/30/2020	Details
Hopkins	Craig	National Board Certificate Holders	Member	07/30/2022	Details
LeSage	Donnie	Jurisdictional Authorities	Member	01/30/2022	Details
Morelock	Brian	Users	Member	01/30/2020	Details
Newton	Venus	Authorized Inspection Agencies	Member	01/30/2020	Details
Pillow	James	General Interest	Member	07/30/2022	Details
Richards	H. Michael	General Interest	Member	08/30/2022	Details
Sekely	James	General Interest	Member	08/30/2020	Details
Sturm	Rick	Jurisdictional Authorities	Member	10/30/2022	Details
Toth	Marty	General Interest	Member	10/30/2022	Details
Troutt	Robby	Jurisdictional Authorities	Member	01/30/2021	Details
Wadkinson	Melissa	Manufacturers	Member	01/30/2020	Details
Washington	Milton	Jurisdictional Authorities	Member	01/30/2022	Details
Welch	Paul	Authorized Inspection Agencies	Member	08/30/2022	Details

ALFRED DONALDSON

1191 Rustling Wind Ln, League City, TX 77573
(281) 334-2303 (home), (832) 360-7892 (cell)
alfred.donaldson@ge.com

OVERVIEW

Experienced Project Manager and Quality Leader with proven ability to lead projects at the global level and the quality system through all phase of operations including new program and facility launches, facility and program reductions and mature program maintenance. GE Oil and Gas Subject Matter Expert in ASME BPVC & NBIC certification process. Excellent understanding and ability to apply lean production concepts throughout the entire organization in multiple industries. Organized, highly motivated, detail-directed change agent, problem solver and coach.

EDUCATION, CERTIFICATIONS AND NOTABLE TRAINING

M.A., Engineering Management, 1999
Saint Martin's University, Lacy, WA

B.S., Environmental Engineering, 1994
United States Military Academy, West Point, NY

- **Member, ASME BPVC XIII Overpressure Protection 2017**
- **Chairman, ASME BPVC XIII Sub-Committee General Requirements 2017**
- **Provisional Member NBIC Committee** 2016
- **Certified Quality Engineer**, ASQ, 2003
- **Certified Shainin Red X Apprentice**, General Motors University, 2005
- **Internal Quality Auditor** trained, DNV & General Electric 2012

PROFESSIONAL EXPERIENCE

Baker Hughes, a General Electric Company, Houston TX 2010-Present

Global Certification Manager, Flow & Process Technology (January 2017 – Present)
Responsible for maintaining and improving all internal ASME manufacturing sites certifications and ASME Quality System(12 globally); responsible for business's global footprint of channel partner development, certification and technical management (approximately 100 individual sites globally); Serve as the business SME for all ASME BPVC & NBIC inquires; responsible for annual ASME code reviews and incorporation of global changes; chair the business level internal ASME & NBIC steering committee; support site expansions & transfer of work.

- Championed the development of an alternative channel partner certification process that provided additional development to the channel partner while decreasing the business risk associated with using channel partners. Also reduced the cost of certification to the business and channel partner by over 50%.
- Initiated and championing two major ASME BPVC code changes that align the code to the needs of the business that will proved a significant cost savings when released in the next code revision.
- Maintained approximately 300 individual ASME & NBIC globally without any business interruptions.
- Developed and currently chair and internal ASME & NBIC steering committee that supports all business functions in reviewing questions, reaching consensus and obtaining formal approval if required.
- Supported the global training department in the development of a common global training process to ensure all technicians receive the same training and evaluation of competency.

Project Manager, Flow & Process Technology (December 2014 – January 2017)
Responsible for leading multiple global projects including site capability expansions, transfer of work, global insourcing of outsourced processes, continuous improvement and common practice development. Functions as the Houston's Oil & Gas Ombuds representative.

- Lead the global insourcing of hydrostatic testing from approximately 50 global suppliers to our certified factories, coordinating additional equipment capability requirements & acquisition, ERP system controls, global process definition and implementation at 8 separate factories in each region of the world.
- Lead the transfer of all ASME certifications and design control activities to the new Flow & Process Technologies Manufacturing Center of Excellence coordinating equipment and tooling requirements & procurement, external audit scheduling, valve technician and machinist training, material availability, code compliant process definition & implementation, and regulatory body coordination.
- Developed and implemented a global document repository system that allows document sharing globally.
- Supported the addition of DMS Suzhou (China) site's expansion as a ASME certified manufacturer with design control responsibilities expanding our global capabilities for the first time.
- Lead the ASME initial implementation and certification at the Dresser India and Dresser South Africa sites allowing these sites to support additional regional customers and provide low cost country manufacturing capability to other GE Oil and Gas factories.
- Support all other GE Oil and Gas sites as the ASME certification SME working to expand global capabilities; 11 sites globally.

Quality Leader, Aftermarket Center Americas (AMC) (October 2010 – Present)
Responsible for the development of the quality management system in a greenfield operation encompassing logistics, valve manufacturing, repair & field service in four separate facilities for all Masoneilan and Consolidated product lines globally. Technical responsibilities include: internal and external metric development, tracking and improvement; ASME and NBIC code compliance; ISO 9001:2001 development and implementation; primary site engineering contact; calibration system owner; document control system champion; continuous improvement leader; quality staff identification, recruiting and development; primary support to operation team members performing quality functions; Global aftermarket quality lead responsible for developing international greenfield operations in Singapore, Dubai, Brazil, Mexico and Italy; Functions as the Houston's Oil & Gas Ombuds representative.

- Lead the implementation of a common AMC quality system developed in conjunction with the National Board and ASME in the GE Singapore, GE Jebel Ali UAE, GE Campinos Brazil and GE Naples Italy sites that received ASME & NB accreditation.
- Merged 6 quality systems and 12 quality manuals into one AMC management system to obtain ISO 9001 certification in 18 months.
- Championed the implementation of the sites continuous improvement process that consists of internal defects definition at the department level, departmental data collection, analysis, and improvement projects.
- Developed a metric driven customer complaint system taking existing warranty data, developing a defect per unit approach and driving continuous improvement. Reduced customer complaints from 15000 PPM to 6500 PPM over two years and reduced time to resolve complaints from an average of 32 days to 8 days.
- Established all quality system functions at the site level including corrective action, document control, nonconforming material, calibration, management review, and purchasing, internal audit.
- Maintained 75 external ASME and National Board Certifications including V, UV, NB, and VR certifications.
- Established the sites quality functions creating job descriptions, recruiting, staffing and training a department of 6 professional employees and numerous hourly inspectors.

BAE Systems, U.S. Combat Systems, Anniston, AL 2008 - 2010

Quality Assurance Manager, Vehicle Overhaul and Upgrade Complex (VUOC) (December 2008 – October 2010)

Responsible for a department of 20 hourly and salaried personnel performing all functions of the quality organization in a multiple facilities supporting numerous contracts. Technical responsibilities include: six sigma & lean manufacturing coordinator and coach; primary DCMA customer contact; internal & external quality metric development, tracking and improvement; calibration system owner; strategic quality planning; quality management review; ISO 9001:2001 management representative and document control champion; internal process control; corrective and preventive action site champion; product quality standards; contract quality review; new contract bid and proposal requirements. Responsible for an annual budget of approximately $1M annually.

- Established and championed a site wide "Continuous Improvement Steering Committee" to maximize resources and champion improvement projects resulting in 16 projects and $555K in annual savings.
- Developed and implemented a "Management Corrective Action Board" to decentralize corrective action ownership and improve department's problem solving that has resulted in zero past due customer corrective action responses.
- Implemented a common manufacturing quality system and defect definition approach between programs and facilities that reduced internal defects per unit from 59 to 39 in twelve months (34% decrease).
- Championed the site's transition from an individual ISO certification to a common corporate certification in 90 days; recognized by DMV with no findings during the last surveillance audit.
- Developed a "Voice of the Customer" metric tracking field failures and comments; consistently rated excellent by government units.
- Developed infrastructure to capture, track and analyze defects at all levels of the process. This system directly influenced the 34% defects per unit decrease.
- Redefined the nonconforming material process to clearly identify owners and responsibility. Reduced the items waiting disposition over 30 days from 25 to zero.

GENERAL MOTORS, Shreveport, LA 1999 - 2008

Quality Manager, Stamping Plant (June 2006 – October 2008.)

Responsible for 3 Quality Engineers and the quality system in a metal fabrication facility, which produces 56 exterior parts. Technical responsibilities include: staff problem solving champion; primary customer contact; internal & external quality metric development, tracking and improvement; strategic quality planning; quality management review; ISO 9001:2001 management and document control; supplier development and management; internal process control including part and equipment monitoring; product quality standards; change control management; product engineering interface; material reduction lead; support of production team members directly involved in quality functions. Also performed the duties of the GMT 745 launch manager for the facility and assistant material manager.

- Maintained 0 external PPM by developing strong working relationships with customers.
- Reduced internal PPM from 15150 to 4200 over an 18 month period.
- Trained organization down to team member level in lean concepts including practical problem solving, work place organization, Kanban material flow, team concept, visual management, product quality standards, Total Predictive Maintenance and Continuous improvement process.
- First site in North America to receive above 90% rating on the General Motors Lean Implementation audit.
- Localized all ISO 9001 procedures resulting in zero findings in two external certification audits.
- Developed and implemented material cost savings in excess of $725,000.
- Developed and implemented quality standards with customer approved reference parts for all produced parts that directly related to IPPM reduction and a cost savings of $500,000 per year.
- Developed and implemented FMEA for all produced parts.
- Championed the plant process control system that resulted in a 50 stroke per hour throughput increase.

Quality Control Engineering Leader, Assembly Plant (January 2004 - May 2006)
Responsible for a team of 10 Quality Engineers that perform lead inspection planning for new vehicle programs and current production support. Technical responsibilities include: problem solving with engineering, suppliers and manufacturing; supplier management and development including lean manufacturing, APQP, PPAP, FMEA, and control plans; development and execution of internal control plans; coordination and evaluation of engineering changes; external metric reduction, including JDP and Warranty; development of part inspection sampling plans; development and maintenance of part quality standards.

- Managed the Global Quality Tracking System for all internal and external quality issues.
- Developed cost recovery process that resulted in approximately $450,000 per year.
- Championed the development of the lean manufacturing system in 5 new tier one facilities resulting in no disruptions during the GMT 355 launch.
- Developed all product quality standards for the two new vehicle programs.
- Championed the JDP Exterior improvement team that reduced IQS from 34.9 to 23.9 PPH.
- Key leader in 345 launch that exceeded the program timing by 28 days exceeding all quality goals.

New Product Quality Launch Engineer, Assembly Plant (January 2002 – December 2003)
Responsible for development of the quality system in the Green Field body, paint and trim areas including welding & torque process control; verification station standardized work; team member inspection training; new product quality standards.

- Developed and implemented body shop weld process control to support new monitoring requirements in a Greenfield facility resulting in no weld disruptions.
- Developed standardized work for all quality verifications stations in a Greenfield facility undergoing a transition to a team concept lean production environment.
- Developed product quality standards and inspection methods for all exterior components.
- Established incoming part inspection plans for at risk suppliers

Reliability Engineer, Assembly Plant (June 1999 - December 2001)
Responsible for problem investigation in the body, paint, trim and final production departments; resolving all supplied part problems; engineering change coordination.

- Supported the body shop in increasing their direct run goal from 88% to 94%.
- Selected over 12 other engineers to function as the second shift quality lead for 6 months.

MILITARY SERVICE

UNITED STATES ARMY May 94 - May 99

Captain, Fort Lewis, WA
Numerous leadership, logistics and administrative functions at all levels of the organization including armor and ammunition platoon leader; armor company executive officer; battalion maintenance office; battalion and group personnel officer

Thakor Patel

thakorpatel1@gmail.com [redacted] | (330) 322-8720

TECHNICAL SKILLS

- Design/ Data Modeling Tools: PRO/ENGINEER/CREO 2 -3D Design, PRO/Mechanica, Auto CAD, CNC programing, iPrism
- Platforms: Microsoft Windows, 2000, XP, Vista 7, MAC OS X, SUN Solaris 2.5 Unix System
- Standards: ASTM, ASME, AISI, API, PIPING Code and MIL specifications

PROFESSIONAL AFFLICATION

- ASME Section XIII Pressure Relief Device, Committee member
- ASME Section XIII, SG-Design and Material, Nuclear, Committee member
- Former ASME SC-SVR: Safety Valve Requirement, Committee Member
- ASME PTC 25: Performance Test Code, Committee Member
- NBIC-SC-PRD: Pressure Relief Device, Committee Member
- API 520, 521, 2000: Pressure Relief System, Committee Member
- API 526, 527 Flanged Steel Pressure Relief Valve, Seat Tightness of Pressure Relief valve Standard, Committee Chairman.

PROFESSIONAL EXPERIENCE

Curtiss Wright Flow Corporation, *Senior Project Engineer* April 1990 - Present

Project Management Responsibilities:

- Lead the team for implementation of Infor Product Lifecycle Management Software Company wide for controlling the item, document and business process.
- System Administrator for CAD software, Pro/Engineer, AutoCAD, Product Center, and PLM
- Served as an Authorized observer for conducting National Board Certification test for preliminary and production of Safety relief Valves in a NB Approved Lab
- Responsible for the training project/application engineers
- Attend ASME, NBIC and API standards conferences with participation on code revisions
- Manage drafting department to ensure drawings/parts are per ANSI and ASME Standards
- Interact with vendors to coordinate the production of castings, hardware and prototypes
- Support manufacturer licensing of safety relief valves internationally

Engineering Responsibilities

- Design and test safety relief/ pilot operated safety valves used on pressure vessels, piping, boilers, equipment's and machines as per the API 526 standard, ASME I/VIII code, ASTM F-1508 by using 3D Pro/Engineer wildfire 5.0/Creo-2. Sizes of pressure relief valves ranges from ½" to 12" inlet / outlet with threaded, flanged, Union ends connections
- Create layout drawings of safety relief valves/pilot operated valves consisting of different orifices
- Design and test safety relief valves for US Navy, tested prototypes to achieve ASTM F 1508, ASME section VIII/I code performance
- Design and fabrication of cryogenic high pressure test stand with its accessories for testing pressure relief valves at cryogenic temperature.
- Continuously improve the existing safety relief valve products by refining the design of components and manufacturing technique

thakorpatel1@gmail.com [redacted] (330) 322-8720

- Utilize MathCAD to calculate the stress level of individual valve components
- Prepare of pool sheet, bill of materials, spring charts and maintenance manual of products
- Sizing of pressure relief valves using iPrism software

Service Metal Fabricating Inc., *Mechanical Engineer* May 1986- March 1990

- Designed mechanical parts, layouts of sheet metal parts, punches and dies
- CNC Programming of sheet metal parts on CAM System for STRIPPIT NC and laser machines
- Designed tooling, jigs, fixtures templates for jobs

Gujarat State Fertilizers Company Ltd., *Mechanical Engineer* September 1976- May 1985

- Supervised and responsible for mechanical staff of twenty-five people
- Planned, coordinated and executed maintenance jobs of rotary and reciprocating machines, pressure vessels piping, heat exchangers and coolers
- Installed and commissioned of equipment's, piping and machines
- Performed troubleshooting of rotary and reciprocating machines
- Engineering design of pressure vessels and piping

EDUCATION

New Jersey Institute of Technology (NJIT) May 1989
Master of Science in Mechanical Engineering

Maharaja Sayajirao University May 1976
Bachelor of Science Mechanical Engineering

Randall D. Austin

Los Alamos National Laboratory
PO Box 1663, Mail Stop 291
Los Alamos, NM 87545
(505) 695-6036
rdaustin@lanl.gov

Qualifications (Current)

National Board Commissioned Boiler Inspector, IS & AI Commission # 10798,
Endorsements R & B

IS – Inservice & Installation Inspector
AI – ASME "Authorized Inspector", (New Construction)
B - ASME Inspector Supervisor (AIS, New Construction)
R - Repair Inspector (NBIC, Repairs & Alterations)

National Board "Review Team Leader", Certificate # 247,
Review Team Leader for R & OU

R – "R" Stamp Shops (Repairs and Alterations, NB-415)
OU – Owner User Inspection Agency (NB-371)

Qualified to perform activities in accordance with NB-290, Qualification of National Board Team Leaders and National Board Representatives.

Permit-Required Confined Space Entry Certified, OSHA Course # 2264

Education

Graduated Heritage High School, Littleton CO – 1974

U.S. Navy, Boiler Technician "A" School for 1200 psi Boilers, Great Lakes, IL – 1975 (160 hours)

U.S. Navy, 1200 psi Boiler Operation, San Diego, CA – 1977 (120 hours)

U.S. Navy, Automatic Boiler Control Systems (Hagen, Bailey & General Regulator Controls), San Diego, CA -1977 (80 hours)

U.S. Navy, Prairie-Masker Technician (Anti-Submarine Warfare), San Diego, CA -1977 (40 hours)

U.S. Navy, 1200 psi, Pressure "P" Fired Boiler School, Philadelphia, PA – 1978 (200 hours)

Hartford Steam Boiler, National Board Preparation Course, Chicago, IL – 1988 (144 hours)

National Board Advanced Boiler and Pressure Vessel Inspectors Course, Columbus, OH – 1992 (80 hours)

National Board of Boiler & Pressure Vessel Inspectors / A.S.M.E. Review Team Leader Course, Columbus, OH – 2003 (24 hours)

United States Department of Labor, OSHA Training Institute, Golden, CO – 2007 (40 hours)

Relevant Experience

- U.S. Navy Boiler Technician 1975 – 1980, (Honorable Discharge).
- Boiler Inspector for The State of Colorado, Department of Labor & Employment, Boiler Inspection Branch 1980 - 2002.

- Chief Boiler Inspector (Director) for The State of Colorado, Department of Labor & Employment, Oil & Public Safety, Boiler Inspection Branch 2002 - 2008.

- Chief Boiler Inspector for The State of Arizona, Industrial Commission, Arizona Department of Safety and Health, Boiler Safety Section 2007 - present.

- National Board of Boiler and Pressure Vessel Inspectors Review Team Leader 2003 – present.

- Over 50,000 documented boiler, and pressure vessel inspections performed.

Other Experience

- Member of The National Board of Boiler and Pressure Vessel Inspectors, 2002 - 2018.

- Appointed by The State of Colorado as the representative member to The American Society of Mechanical Engineers (A.S.M.E.) Boiler & Pressure Vessel Conference Committee 2002 – 2008.

- Appointed by The State of Arizona as the representative member to The American Society of Mechanical Engineers (A.S.M.E.) Boiler & Pressure Vessel Conference Committee 2008 – 2018.

- Committee member of The American Society of Mechanical Engineers, Controls and Safety Devices for Automatically Fired Boilers (A.S.M.E. CSD-1) 2005 – present.

- Committee member of The American Society of Mechanical Engineers, Power Piping (ASME B31.1, General Requirements) 2010 – 2015.

- Committee member of The National Board Inspection Code (NBIC), Part 1, Subgroup & Subcommittee Installation, 2016 – 2018.

- Technical Panel Member of UL834, Standard for Heating, Water Supply, and Power Boilers – Electric, Underwriters Laboratories 2011 – present.

- Member of Peer Review Board, The National Board of Boiler and Pressure Vessel Inspectors, 2016 - 2018.

- Main Committee member of National Board Inspection Code, NBIC, 2017 – 2018.

- Colorado Army National Guard from 1980 -1989, Rank Staff Sergeant, Crew Chief 8” Self Propelled Howitzer. Three (3) years as trainer for COANG Leadership Development Course (Basic, Primary and Advanced), (Honorable Discharge).

- Authored numerous Laws (State Statutes), and Rules for Boilers and Pressure Vessels in two jurisdictions.

Interpretation IN19-5

Proposed Interpretation

Inquiry:	IN19-5
Source:	
Subject:	NBIC Part 3 Section Part 3, 3.2.6
Edition:	2017
General Description:	
Question 1:	Can user's opinion, categorization and proposed Repair methods be considered under NBIC Part 3, 3.2.6?
Reply 1:	No
Committee's Question 1:	Can a bolt hole in a SA350-LF2 flange be repaired using SA-105 material that is welded using a Welding Procedure Specification (WPS) that was qualified without postweld heat treatment (PWHT) and without impact testing?
Committee's Reply 1:	This is consulting.
Question 2:	Does AI have final authority to take decision under Part 3, 3.2.6 when jurisdiction does not exist?
Reply 2:	Yes
Committee's Question 2:	Does the Inspector have final authority for review and acceptance of a repair by a repair organization that has an "R" Certificate of Authorization under Part 3, 3.2.6 when jurisdiction does not exist?
Committee's Reply 2:	Yes.
Rationale:	NBIC Part 3, Section 3.2.6
SC Vote	
NBIC Vote	

Rationale:

3.2.6 REFERENCE TO OTHER CODES AND STANDARDS

Other codes, standards, and practices pertaining to the repair and alteration of pressure retaining items can provide useful guidance. Use of these codes, standards and practices is subject to review and acceptance by the Inspector, and when required, by the Jurisdiction. The user is cautioned that the referenced codes, standards and practices may address methods categorized as repairs; however, some of these methods are considered alterations by the NBIC.

In the event of a conflict with the requirements of the NBIC, the requirements of the NBIC take precedence.

Some examples are as follows:
a) National Board *BULLETIN* - National Board Classic Articles Series;
b) ASME PCC-1, Guidelines for Pressure Boundary Bolted Flange Joint Assembly;
c) ASME PCC-2, Repair of Pressure Equipment and Piping.

ASME Section IIA, SA-350/SA-350M, 2017 ED, SPECIFICATION FOR CARBON AND LOW-ALLOY STEEL FORGINGS, REQUIRING NOTCH TOUGHNESS TESTING FOR PIPING COMPONENTS

4. General Requirements

4.1 Product furnished to this specification shall conform to the requirements of Specification A 961, including any supplementary requirements that are indicated in the purchase order. Failure to comply with the general requirements of Specification A 961 constitutes nonconformance with this specification. In case of conflict between the requirements of this specification and Specification A 961, this specification shall prevail.

7.2 Impact Test:

7.2.1 Requirements — The material shall conform to the requirements for impact properties in Table 3 when tested at the applicable standard temperature in Table 4 within the limits of 7.2.4.2 and 7.2.4.3.

11. Rework and Retreatment

11.3.1 Repair by welding shall be made using welding procedures and welders qualified in accordance with ASME Section IX of the Code. The weld procedure qualification test shall also include impact tests of the weld metal and heat-affected zone. All impact test specimens shall have the longitudinal axis transverse to the weld and the base of the notch normal to the weld surface.

ASTM A 961: Standard Specification for Common Requirements for Steel Flanges, Forged Fittings, Valves, and Parts for Piping Applications

12. Impact Requirements

12.1 The part shall conform to the impact requirements prescribed in the product specification.

Background Information IN19-5 from the Inquirer:

Saudi Aramco Hawiyah Gas Plant (User) requested Repair to one of their Floating tube sheet Heat Exchanger (UHX-14.1(a)). The user requested repair organization to plug all bolt holes of floating tube sheet using Plug material SA-105 and close by welding. New holes were drilled at center of the ligament of previously drilled bolt holes as required by original drawing of the heat exchanger. No design has been performed and method classified as "Repair".

It is informed that the floating tube sheet has shrunk during service and due to which after dismantling it was difficult to reassemble the Floating tube sheet.

Tube Sheet Material is SA350 LF2 Class-1. WPS used to close holes is without PWHT and without impact.

National Board Inspector rejected the repair method with the following understanding:

1. Welding on SA-350 forging shall meet requirement for Repair of Base Material in accordance with SA 350 and Section 11.8.
2. Integrity of this Flange is compromised as it is Plugged with SA 105 Material and welded for 5 mm with Groove on both Side. This methodology of Repairing Base material is not approved as per Code

AIS Concurred and provided his Opinion to AI question as follows:

1. Welding on SA-350 forging shall meet requirement for Repair of Base Material in accordance with SA-350 and Section 11.8

AIS Opinion: All types of repairs are not addressed in NBIC however para 3.2.6 shall be applicable and to be complied.

2. Integrity of this Flange is now compromised as it is Plugged with SA 105 Material and welded for 5 mm with Groove on both Side. This methodology of Repairing Base material is not approved as per Code

AIS Opinion: Refer my comments above, the user is cautioned in para 3.2.6 that the referenced codes, standards and practices may address methods categorized as repairs. These methods/Practices must be accepted by AI.

Questions:

1. Can user opinion, categorization and acceptance of Repair methods be considered under NBIC Para 3.2.6, Part 3?
2. Does NB consider this repair method as an acceptable practice?

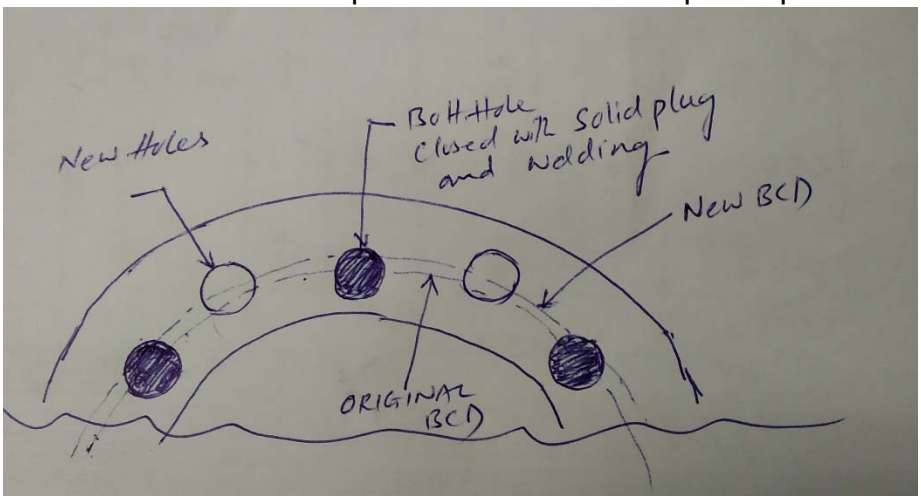

PROPOSED INTERPRETATION

Inquiry No.	19-10
Source	Paul Shanks
Subject	Interpretations
Edition	2017
Question	May an interpretation issued to a past NBIC edition be used in any other NBIC edition when the words in the NBIC paragraph are the same? (See Part 3, Introduction, Interpretations for text reference)
Reply	Yes if the NBIC has not changed the requirements pertaining to the interpretation
Committee's Question	May an interpretation issued to ~~a~~an ~~past~~ earlier NBIC Edition be used for any other NBIC Edition when the requirements of the NBIC are the same?
Committee's Reply	Yes.
Rationale	NBIC currently limits each interpretation to the edition it was issued for. However, often time the words in question do not change from one edition to another. At present a new interpretation would be needed for each edition of the NBIC to address the same issues, this is a delay to field work and a drain on NBIC committee time. **Background Information:** Understandably each request for interpretation does not require a change to the words in the NBIC, but given the same NBIC words and consistent committee approach to resolving interpretations the same answer should be provided from one edition to the next. But this would cause a delay in working to a standard accepted practice and would consume time for the committee answering the same base question each year. Further the proposed approach is that which ASME currently employs and whilst NBIC and ASME are different they do operate within the same industrial sphere so the proposed interpretation is not unusual.
SC Vote	
NBIC Vote	

Negative Vote Comments	

PROPOSED INTERPRETATION

Inquiry No.	Item 19-25
Source	M.A. Shah abmindustrialservices@gmail.com
Subject	This inquiry seeks an interpretation of NBIC Part 3, 4.4.2 c), which states the following: c) Nondestructive Examination NDE may be conducted when contamination of the pressure-retaining item by liquids is possible or when pressure testing is not practicable. Concurrence of the owner shall be obtained in addition to the Inspector, and where required, the Jurisdiction. Exclusive use of Visual Examination (VT) shall not be permitted. In all cases NDE methods or combination of methods used shall be suitable for providing meaningful results to verify the integrity of the alteration.
Edition	2017
Explanation of Need	For ASME BPV Section VIII Division 2 Vessel is under Alteration with Re-rate of lowering MAWP & increasing of Design Temperature & there is no physical alteration in the Vessel but only change is in the Alteration design report because of different design stress intensity value at higher design temperature.
Question	In lieu of a liquid pressure test, what kind of NDE methods or combination of methods used shall be suitable for providing meaningful results to verify the integrity of the alteration?
Reply	No further NDE shall be required as there is no Physical Alteration for the Vessel.
Committee's Question 1	An alteration to a Section VIII Div. 2 vessel is performed by lowering the MAWP and increasing the design temperature. No physical work was performed on the vessel. Calculations confirm that the hydrostatic test pressure for the new MAWP and design temperature would be higher than that of the original hydrostatic test pressure. Is a new hydrostatic test required after the alteration is completed?
Committee's Reply 1	Yes, except as provided in Part 3, 4.4.2.c.
Committee's Question 2	The NBIC Part 3, 4.4.2.c provides rules for performing NDE in lieu of a hydrostatic test of an alteration. Is it required that concurrence of the owner, the Inspector, and when required, the Jurisdiction be obtained regarding the NDE methods, or combination of methods, to be used to verify the integrity of the alteration?
Committee's Reply 2	Yes.
Rationale	NBIC Part 3, Section 3.3.4, Section 4.4.2. and Section 9.1
SC Vote	

NBIC Vote	
Negative Vote Comments	

Relevant Background

NBIC Section 3.4.4 clearly states that an example of an alteration is an increase in the design temperature for the pressure retaining item. Furthermore, the definitions section 9.1 states that nonphysical changes such as an increase in the design temperature shall be considered an alteration. Thus, in the background information provided by the requestor, it is clear that this scenario describes a vessel which has been altered.

Page 68, Section 3, Part 3

3.4.4 EXAMPLES OF ALTERATIONS (17)

a) An increase in the maximum allowable working pressure (internal or external) or temperature of a pressure-retaining item regardless of whether or not a physical change was made to the pressure-retaining item;

Page 237, Section 9, Part 3

Alteration — A change in the item described on the original Manufacturer's Data Report which affects the pressure containing capability of the pressure-retaining item. (See NBIC Part 3, 3.4.3, *Examples of Alteration*) Nonphysical changes such as an increase in the maximum allowable working pressure (internal or external), increase in design temperature, or a reduction in minimum temperature of a pressure-retaining item shall be considered an alteration.

The 'explanation of need' now links to the relevant Section 4.4.2 which requires that one of the following shall be applied to an activity considered to be an alteration: liquid pressure test; pneumatic test; or nondestructive examination. The NBIC does not describe which NDE methods are acceptable, merely that: *concurrence of the owner and inspector and possibly the jurisdiction shall be obtained; that visual examination is not sufficient; and the selected method shall be suitable to provide meaningful results verifying the integrity of the vessel*.

Page 73, Section 4, Part 3

4.4.2 TEST OR EXAMINATION METHODS APPLICABLE TO ALTERATIONS

Based on the nature and scope of the alterations activity, one or a combination of the following examination and test methods shall be applied to alterations and replacement parts used in alterations.

a) Liquid Pressure Test

b) Pneumatic Test

c) Nondestructive Examination

Relevant Interpretations

INTERPRETATION 93-5

Subject: Chapter III, R-503(d)

1992 edition

Question: If a pressure test required for a re-rated vessel is less than or equal to the hydrostatic test performed during construction, is a new pressure test required after the re-rating is completed?

Reply: No, provided no physical work is performed.

INTERPRETATION 98-15

Subject: RC-3022 & RC-3030(h) Pressure Testing Requirements Related to Re-rating Activities

1995 Edition with the 1996 Addendum

Question 1: If calculations and current thickness measurements indicate that a pressure retaining item may be altered by re-rating only (no physical work being done), may the original pressure test as recorded on the Manufacturer's Data Report be used to satisfy RC-3022(d), if the pressure test is at least equal to the calculated test pressure required to verify the integrity of said alteration, subject to the approval of the Inspector and the requirements of the jurisdiction?

Reply 1: Yes.

Question 2: If the maximum allowable working pressure (MAWP) of a pressure-retaining item must be reduced, due to wall thinning below the minimum wall thickness required to contain the MAWP stated on the manufacturer's data report and on the ASME stamped nameplate, but the maximum allowable temperature is increased, is it the intent of the NBIC that this be considered a re-rate?

Reply 2: Yes. Any increase in pressure or temperature is considered a re-rate in accordance with RC-3022.

Question 3: If the maximum allowable working pressure (MAWP) of a pressure-retaining item must be reduced, due to wall thinning below the minimum wall thickness required to contain the MAWP stated on the manufacturer's data report and on the ASME stamped nameplate, but the maximum allowable temperature is increased, is it the intent of the NBIC that this is, in effect, a derate and outside the scope of the NBIC?

Reply 3: No. Any increase in pressure or temperature is considered a re-rate in accordance with RC-3022.

INTERPRETATION 98-34

Subject: RC-3030 Examination and Testing

1995 Edition with the 1996 Addendum

Question: When the design rated capacity of a boiler is increased without physical work such that the design pressure and temperature are unaffected, is it required to perform a pressure test in accordance with the NBIC?

Reply: No.

Interpretation IN19-26

Proposed Interpretation

Inquiry:	IN19-26
Source:	Doug Biggar
Subject:	NBIC Part 3 Section Part 3, 3.3.2
Edition:	[Current/all]
General Description:	Repair of none pressure boundary parts
Question 1:	If a welding repair is done to an appendage of a horizontal ASME LPG pressure vessel such as a faulty leg or the raised data plate holder, is this considered routine and are we exempt to have an inspector present to witness it and/or fill out a specialized form?
Reply 1:	No inspector needs to be present as the welding is not performed on any part of the pressure vessel directly related to its performance under pressure.
Question 2:	What is the minimum length of an appendage we can weld onto without being an ASME/NBIC certified welder (only a standard welding ticket)?
Reply 2:	1/4”
Committee’s Question 1:	Are refurbishment activities such as shot blasting, thread cleaning and painting considered within the scope of the NBIC?
Committee’s Reply 1:	No
Rationale 1:	These activities should not affect the pressure retaining integrity of the item, per the introduction to the NBIC that (maintenance) is the function of the NBIC. Reasonably these activities fall outside the scope of the NBIC
Committee’s Question 2:	When welding activities are conducted on materials which are not pressure retaining items of a Pressure Retaining Item and those welding activities do not affect the original design of the Pressure Retaining Item including applied loads, is said welding within the scope of the NBIC?
Committee’s Reply 2:	No, provided welding is not done directly on the pressure retaining item.
Rationale:2	Assumed intent-TBC by committee
Committee’s Question 3:	
Committee’s	

Reply 3:	
Rationale:3	Paragraph 5.11 requires that, subject to the approval of the Jurisdiction, an Inspector shall make witness to such activities.
Rationale:	NBIC Part 3, Introduction, Section 3.3.2 e), 3.3.3, 3.4.4 & 5.11
NBIC Vote	

Include in response letter: NA

Rationale:

Having emailed the enquirer to determine the scope of their typical operations it was clear that there was a general misunderstanding about the purpose of the NBIC, the proposed questions are overly specific and as sure fail to grasp the crux of the issue hence the question re-write. Q3 was added to ensure that no misunderstand occurs. With the exception of a very hardline reading on Section 3.3.2 a) the NBIC addresses in the main body and the introduction the pressure retaining capability of the item and not work conducted elsewhere.

Sections 3.3.2 e), 3.3.3 & 3.4.4 address working (welding / replacing) on components which have a pressure retaining function. Pipes, tubes, heads, shell, and tube sheet are mentioned, integral parts without pressure retaining function such as legs and davit arms are not addressed.

Section 3.3.3 a) can be read as "Weld repairs ~~or replacement of pressure parts or~~ of (sic) attachments that have failed in a weld or in the base material;"

Section 5.11 requires Inspector witnessing and Jurisdiction approval for nameplate removal/replacement.

PROPOSED INTERPRETATION

Inquiry No.	**19-34**
Source	GE Power
Subject	NBIC Part 3, paragraph 3.2.2 e), Pressure Testing of Replacement Parts
Edition	2017
Question	NBIC Part 3 paragraph 3.2.2 e) states that the replacement part shall receive a pressure test as required by the original code of construction. ASME has issued an interpretation (I-16-6) clarifying that Section I does not provide rules for hydrostatic testing of parts supplied for repair or alteration of existing boilers. Is it the intent of 3.2.2 e) that the reference to the original code of construction is for determining the hydrostatic test pressure?
Reply	Yes
Committee's Question	NBIC Part 3 paragraph 3.2.2 e) states that the replacement part shall receive a pressure test as required by the original code of construction. Is it the intent of 3.2.2 e) that the reference to the original code of construction is for determining the pressure used for the hydrostatic test?
Committee's Reply	Yes
Rationale	ASME has issued interpretation I-16-1 and revised PW-54 to clarify that Section I does not contain requirements for the hydrostatic testing of replacement parts. Based on this, the language in 3-3.2.2 e) *"… as required by the original code of construction"* could be interpreted to mean that pressure testing of parts is not required because Section I does not require testing of replacement parts. On review, this was not the Committee's intent when clause e) was added to 3.2.2. The proposed intent interpretation and a supporting text revision is provided to clarify this issue. By linking the words *"original code of construction"* to the test pressure, it eliminates the potential interpretation that testing is only required when the original code of construction specifically requires testing of replacement parts.
SC Vote	
NBIC Vote	
Negative Vote Comments	

Background Materials Submitted by the Inquirer

NBIC Part 3 Section 3 paragraph 3.2.2 e) (shown below) states that replacement parts shall receive a pressure test as required by the original code of construction. We are concerned that this clause is not being interpreted consistently by all users of the NBIC. The words in question are *"…as required by the original code of construction."* ASME issued interpretation I-16-1 (shown below) and revised PW-54 to clarify that Section I does not contain requirements for the hydrostatic testing of replacement parts provided for an existing unit. Based on this, the words *"… as required by the original code of construction."* could be interpreted to mean that pressure testing of the parts is not required because Section I does not require testing of replacement parts. We do not think that was the Committee's intent when clause e) was added to 3.2.2. We submit the proposed intent interpretation and proposed revision for the Committee's consideration to clarify this issue. By linking the words "original code of construction" to the test pressure, it eliminates the potential interpretation that testing is only required when the original code of construction specifically requires testing of replacement parts.

Proposed Intent Interpretation:
Question: NBIC Part 3 paragraph 3.2.2 e) states that the replacement part shall receive a pressure test as required by the original code of construction. ASME has issued an interpretation (I-16-6) clarifying that Section I does not provide rules for hydrostatic testing of parts supplied for repair or alteration of existing boilers. Is it the intent of 3.2.2 e) that the reference to the original code of construction is for determining the hydrostatic test pressure?
Reply: Yes.

Associated Revision:
e) Replacement parts addressed by 3.2.2 c) or d) above shall receive a pressure test ~~as required by~~ at the pressure determined for the completed pressure equipment (boiler, pressure vessel, etc.) in accordance with the original code of construction. If replacement parts have not been pressure tested to this pressure ~~as required by the original code of construction~~ prior to installation they may be installed without performing the ~~original code of construction~~ pressure test provided the owner, the Inspector and, when required, the Jurisdiction accept the use of one or a combination of the examination and test methods shown in Part 3, Section 4, paragraph 4.4.1 (for repairs) or 4.4.2 (for alterations). The R Certificate Holder responsible for completing the R Form shall note in the Remarks section of the R Form the examination(s) and test(s) performed, and the reason the replacement part was not tested at the pressure determined for the completed pressure equipment in accordance with the original code of construction.

Background Information:

NBIC Part 3 Section 3 paragraph 3.2.2 e)

e) Replacement parts addressed by 3.2.2 c) or d) above shall receive a pressure test as required by the original code of construction. If replacement parts have not been pressure tested as required by the original code of construction prior to installation they may be installed without performing the original code of construction pressure test provided the owner, the Inspector and, when required, the Jurisdiction accept the use of one or a combination of the examination and test methods shown in Part 3, Section 4, paragraph 4.4.1 (for repairs) or 4.4.2 (for alterations). The R Certificate Holder responsible for completing the R Form shall note in the Remarks section of the R Form the examination(s) and test(s) performed, and the reason the replacement part was not tested in accordance with the original code of construction.

ASME Interpretation I-16-6

Standard Designation:	BPV I
Edition/Addenda:	2015
Para./Fig./Table No:	PW-54
Subject Description:	Section I Intent Interpretation, PW-54 Hydrostatic Testing of Section I Parts
Date Issued:	08/16/2016
Record Number:	13-942
Interpretation Number :	BPV I-16-6
Question(s) and Reply(ies):	Question: Is it the intent of Section I that the rules of PW-54 regarding hydrostatic testing apply to parts supplied for repair or alteration of existing boilers? Reply: No. Section I does not provide rules for hydrostatic testing of parts supplied for repair or alteration of existing boilers. Please be guided by Appendix A-64, Repair to Existing Boilers.

2017 Addition to PW-54

PW-54.4 Refer to A-64 as guidance for welded pressure parts supplied to the user of an existing boiler as replacement or repair parts. (**17**)

A-64

A-64 REPAIRS TO EXISTING BOILERS

Where repairs are necessary that in any way affect the working pressure or safety of a boiler, a state inspector, municipal inspector, or an inspector employed regularly by an insurance company, which is authorized to do a boiler insurance business in the state in which the boiler is used, shall be called for consultation and advice as to the best method of making such repairs; after such repairs are made they shall be subject to the approval of a state inspector, municipal inspector, or an inspector regularly employed by an insurance company that is authorized to do a boiler insurance business in the state in which the boiler is used.

PROPOSED INTERPRETATION

Inquiry No. **19-36**	Part 3, Section 3, 3.3.2 and 3.3.5, Routine Repairs of Section VIII Div.2 and Div.3 Pressure Vessels
Source	Inquirer: Narayanan Murugappan NBIC Committee PM: Jim Pillow
Subject	Part 3, Section 3, 3.3.2 Routine Repairs and 3.3.5 Repair of Section VIII Div.2 and Div.3 Pressure Vessels
Edition	2017
Question	**Inquirer's Proposed Q and R** **Question 1:** Is Routine Repairs defined para 3.3.2 applicable to pressure vessels constructed to ASME Section VIII Division-2 and 3? **Proposed Reply 1:** Yes. **Question 2:** If the answer to the above question is Yes, are requirements specified in Para 3.3.5 to be followed for routine repairs to pressure vessels constructed to ASME Section VIII Division-2 and 3? **Proposed Reply 2:** Yes.
Reply	
Committee's Question	Q1; Is a repair plan required for all repairs of an ASME Section VIII Div. 2 or Div. 3 pressure vessel? Q2: May the repair plan for an ASME Section VIII Div.2 or Div.3 pressure vessel be accepted by the Inspector in lieu of the Authorized Inspection Agency or the Owner-User Inspection Organization? Q3: Must the Authorized Inspection Agency's or the Owner-User Inspection Organization's Inspector make an acceptance inspection of the repair of an ASME Section VIII Div.2 or Div.3 pressure vessel? Q4: Are routine repairs defined in Part 3, Section 3, 3.3.2, applicable to pressure vessels constructed to ASME Section VIII Div.2 or Div.3?

Committee's Reply	R1: Yes. See Part 3, 3.3.5.2. R2: No. See Part 3, 3.3.5.2(b). R3: Yes. See Part 3, 3.3.5.2(b). R4: No. Inspection of the repair by the Inspector is required.
Rationale	The rules for routine repairs do not require in process involvement by the Inspector to inspect and accept the repair. The rules described in Part 3, 3.3.5.2(b) are clear that the Inspector must make an acceptance inspection of the repair.
SC Vote	
NBIC Vote	
Negative Vote Comments	

BACKGROUND/INQUIRER'S REQUEST

Explanation of Need: Para 3.3.2 talks about requirements for and examples of routine repairs. It does not specify any restrictions on pressure retaining items construction Code. It states that Routine repairs are repairs for which the requirements for in-process involvement by the Inspector and stamping by the "R" Certificate Holder may be waived as determined appropriate by the Jurisdiction and the Inspector. It states that all other applicable requirements of this code (NBIC) shall be met. Para 3.3.5.1 of NBIC states that the following requirements shall apply for the repair of pressure vessels constructed to the requirements of Section VIII, Division 2 or 3, of the ASME Code. This calls for properly certified repair plan to be submitted to the Inspector who will make acceptance inspection and sign R-1 Form.

Background Information: The recent interpretations issued by NBIC are reproduced below.

INTERPRETATION 17-17

Subject: Repair and alteration of Section VIII Division 2 items

Edition: 2017

Question: Is it permissible to perform a repair or alteration on an ASME Section VIII, Division 2 pressure vessel in accordance with the NBIC when the original User's Design Specification (UDS) and/or the Manufacturer's Design Report (MDR) is not available?

Reply: No. The Repair/Alteration Plan is required to be compatible with the UDS and MDR per the NBIC Part 3, Sections 3.3.5 and 3.4.5.

INTERPRETATION 17-08

Subject: Repair/Alteration Plans for ASME VIII, Division 2, Class 1 Pressure Vessels

Edition: 2017

Question: Does the NBIC require a Repair/Alteration Plan for an ASME Section VIII, Division 2, Class 1 vessel to be certified by an engineer when a Manufacturer's Design Report was not required to be certified under the original code of construction?

Reply: No.

NBIC EXCERPTS

3.3.5 REPAIR OF ASME SECTION VIII, DIVISION 2 OR 3, PRESSURE VESSELS

3.3.5.1 SCOPE

The following requirements shall apply for the repair of pressure vessels constructed to the requirements of Section VIII, Division 2 or 3, of the ASME Code.

3.3.5.2 REPAIR PLAN

The user shall prepare, or cause to have prepared, a detailed plan covering the scope of the repair.

a) Engineer Review and Certification
The repair plan shall be reviewed and certified by an engineer meeting the criteria of ASME Section VIII, Division 2 or 3, as applicable, for an engineer signing and certifying a Manufacturer's Design Report. The review and certification shall be such as to ensure the work involved in the repair is compatible with the User's Design Specification and the Manufacturer's Design Report.

Note: The engineer qualification criteria of the Jurisdiction where the pressure vessel is installed should be verified before selecting the certifying engineer.

b) Authorized Inspection Agency Acceptance
Following review and certification, the repair plan shall be submitted for acceptance to the Authorized Inspection Agency/Owner-User Inspection Organization whose Inspector will make the acceptance inspection and sign the Form R-1.

Item 19-42 – Interpretation Request
Submitted by: Paul Shanks paul.shanks@onecis.com

NBIC Location: Part 3, 3.3.3 s) and 3.4.4 g)

Explanation of Need: The design requirement in 3.3.3 s) is not well defined and is allowing potentially unsafe material changes to be conducted as repairs without adequate assessment.

Background Information: Most pressure vessel parts are design in isolation from those around them or connected to them, heads and shell for example. There are however some components which take strength from or are subject to stresses imposed form adjacent components. For example, body flanges and bolting or tube sheets and the tubes. 3.3.3 s) allows materials of high strength than originally used to be implemented in a repair, under the condition that they "satisfy the material and design requirements of the original code" it is intuitively obvious what is meant by the material requirements but the design requirements are unclear and a great many people thing stronger is more better. But in the case of tubes in a fixed tube sheet heat exchanger or bolting on a custom body flange this is not necessarily the case, upgrading the bolts or tubes could introduce an unsafe overstressed condition in the adjacent materials unless calculations are conducted this will not be known. 3.4.4 g) could be used to indicate that the some material 'upgrades' need to be an alteration but as it refers back to 3.3.3 s) and the design requirement is not well defined it becomes hard to justify a material 'upgrade' as an alteration.

Question 1: 3.3.3 s) includes the following "provided the replacement material satisfies the material and design requirements of the original code of construction" it is clear that the material must be one permitted by the original code of construction but in referring to the "design requirements" is it the intent of the NBIC that when higher strength material are use the new material must not introduce an overstress situation?

Reply 1: Yes.

Question 2: If the above answer is no please remove 3.4.4 g) as it is superfluous or reword it to address changing to materials with lower allowable stresses specifically.

PROPOSED INTERPRETATION

Inquiry No.	**19-62**
Source	John Siefert, EPRI
Subject	Interpretation for using NBIC Part 3, 2.5.3.6 Welding Method 6 on Grade 92 **Background:** Most creep strength enhanced ferritic (CSEF) steels exist as Code Case materials. One such example is Grade 92 steel. This material still exists as a Code Case (2179), and it appears in some SA-specs, for example: SA-213 T91, SA-335 P91, SA-336 F92, and so forth. ASME B&PV Code does not yet have a strategy or plan for the formal adoption of Code Case materials into the main body of the Code. In Code Case 2179-8 it states: "(c) For the purposes of procedure and performance qualifications, the material shall be considered P-No. 15E Group 1. The procedure and performance qualifications shall be conducted in accordance with Section IX." There exist applications of Code Case 2179 in boiler tubing where the alternative weld repair methodology would be identical to that which is described in Welding Method 6. However, because of its Code Case status, it is not clear how to handle repairs for Code Case 2179 although the material is recognized as having similar welding characteristics and qualification rules in ASME Section IX. **Explanation of Need:** End-users are experience failures in SA-213 T92 Code Case 2179 material and would like the option to invoke Welding Method 6 for repairs internal to the boiler setting.
Edition	2019
Question	May Welding Method 6 also be used on CSEF steel which has been manufactured to the requirements in Code Case 2179, and otherwise classified as P No 15E Group 1?
Reply	Yes
Committee's Question	
Committee's Reply	
Rationale	

PROPOSED INTERPRETATION

Inquiry No.	**19-66**
Source	Jagadheesan Vellingiri Muthukumaraswamy, ABS Consulting
Subject	Shell Side Heat Exchanger PWHT **Background:** An R Certificate Holder is Doing Repair Work on the Shell Side of Heat Exchanger, which was not PWHT Earlier. As per Client Request, Welded Joints are Post weld Heat Treated and Consider as Alteration, Client wants Shell Side to Under Go Full Post weld Heat Treatment Including areas not repaired. NDE is being Carried out for Complete Equipment and Client wants PWHT for Welds which are in Services and without any repairs.
Edition	2019; Part 3, 3.4 & 2.5.2
Question	1. An R Certificate Holder is Doing Repair Work on the Shell Side of Heat Exchanger, which was not Post Welded Heat treated Earlier. As per Client Request, Repair Welded Joints are Post weld Heat Treated and Consider as Alteration as per 3.4, For Welded Joints not repaired Can Post weld Heat treatment be done and Responsibility can be Taken by R Certification and Considered Alteration? 2. If R Stamp Holder Holds WPS for The Vessel with PWHT can that Post Weld Heat Treatment be carried out as per as per Approved WPS in order to meet Alteration requirement?
Reply	1. No. 2. Yes
Committee's Question	
Committee's Reply	
Rationale	

PROPOSED INTERPRETATION

Inquiry No.	**19-67**
Source	Doug Fowler, TUV AIA Services
Subject	Clarification of Part 3, 1.5.1 d) 1) **Background:** Manufacturers in non-jurisdictional states are making API-510 repairs or "non" code repairs to Code vessels when an NBIC rule is not convenient to an owner/customer. This should stop in my opinion. I interpret the statement in Part 3, 1.5.1 d) 1) to mean a stamp holder must do repairs or alterations to the NBIC. Clarification would be appreciated as the statement "as applicable" is ambiguous. .
Edition	2019; Part: Repairs and Alterations; Section: 1; Paragraph: 1.5.1 (d) (1)
Question	In Part 3 Section 1 Paragraph 1.5.1 (d) (1) it states: A statement that all repairs or alterations carried out by the organization shall meet the requirements of the NBIC and the Jurisdiction, as applicable. Does the statement mean an organization holding an "R" stamp must do all repairs and organizations to the NBIC?
Reply	Yes
Committee's Question	
Committee's Reply	
Rationale	

PROPOSED INTERPRETATION

Inquiry No.	**19-86**
Source	Luis Ponce, National Board
Subject	National Certified Pipe Welding Bureau (NCPWB) welding procedure specs **Background:** Some ASME and National Board Certificate Holders have presented NCPWB procedures to Team Leaders (designees) at joint reviews as part of their welding demonstrations, and those companies may not understand the limited scope in which the procedures may be used. ASME Sect I, PW-28.5 used to read like B31.1, para 127.5.3. which states, "Each employer shall be responsible for qualifying any WPS that he/she intends to have used by personnel of his/her organization. However, to avoid duplication of effort, and subject to approval of the owner, a WPS qualified by a technically competent group or agency may be used if: (A.1) the group or agency qualifying the WPS meets all of the procedure qualification requirements of this Code, (A.2) the fabricator accepts the WPS thus qualified, (A.3) the user of the WPS has qualified at least one welder using the WPS, and (A.4) the user of the WPS assumes specific responsibility for the procedure qualification work done for him/her by signing the records required by para. 127.6. However, PW-38.5 was removed in the 2009 Addenda to Section I and no longer exists in the Code, therefore the interpretation is no longer valid. Section VIII Div. 1 is silent on procedures "qualified by a technically competent group or agency." Both Section I and VIII Div 1 require welding procedures to be qualified in accordance with Section IX. In conclusion, NCPWB WPSs may only be used for Code work on ASME B31.1 power piping and under no other ASME construction Code.
Edition	2019; Part: Repairs and Alterations; Section: 2; Paragraph: 2.2 & 2.2.1
Question	1. May an "R" certificate holder use a National Certified Pipe Welding Bureau (NCPWB) welding procedure for repairs and alterations of pressure retaining items consisting of pipe where ASME B31.1 is the construction Code? 2. May an "R" certificate holder use a National Certified Pipe Welding Bureau (NCPWB) welding procedure for repairs and alterations of pressure retaining items consisting of pipe (as the shell or nozzles) where ASME Section I or Section VIII Div 1 is the construction Code?
Reply	1. Yes. 2. No, because the NCPWB itself states the bureau operates exclusively under the scope of the ASME B31 Code for Pressure Piping, including B31.1 power piping.
Committee's Question	
Committee's Reply	

Rationale	

PROPOSED INTERPRETATION

Inquiry No.	**19-87**
Source	Robert Underwood, Hartford Steam Boiler
Subject	Form Registration Log **Background:** NBIC Part 3, 5.6 requires "R" Certificate Holders to maintain a log or multiple logs documenting all Forms registered with the National Board. Information required to be included in the Log are the form's unique registration number, description of work performed, date of AIA acceptance, and date the report was submitted to the National Board. .
Edition	2019; Part: Repairs and Alterations; Section: 5; Paragraph: 5.6
Question	May the Form Registration Log referenced in paragraph 5.6 be maintained electronically in the National Board Electronic Data Transfer (EDT) System?
Reply	Yes.
Committee's Question	
Committee's Reply	
Rationale	

Item NB15-1405 (*formally IN14-0401*)

The following is a history of record number NB15-1405, formally inquiry record 14-0401, found in NBIC committee Minutes from inception in 2014.

January 2014 **(see attachment "A")**	**Main Committee Minutes:** **IN14-0401 - *Part 3, 1.2*** - Question 1: The NBIC Part 3 paragraph 1.2 states that a repair shall be carried out "insofar as possible to the section and edition of the ASME code most applicable to the work planned." If a vessel is constructed using SA-517-E (P-11B) material to ASME Section VIII Div. 1, where production and weld procedure impact tests were required during construction, would a repair to a crack in the shell require production and weld procedure impact testing under the NBIC? Proposed Reply 1: Yes. (No attachment) Question 2: If the answer to Question 1 is yes and there was no SA-517-E material from the original lot available, would the repair require the addition of new base material (e.g. a flush patch around the area of the crack) so that production impact tests could be performed with the original base metal to the new base metal? Proposed Reply 1: Yes. Question 3: If the vessel described in Question 1 was to be altered by adding an SA-675 (P-1) pump flange to the shell, would production and weld procedure impact tests be required using the same lot P-1 and P-11B base materials as used in the alteration? Proposed Reply 1: Yes. January 2014 A task group of Walt Sperko, Bob Wielgoszinski (PM), and George Galanes will work on this inquiry. **SC RA Minutes:** January 2014 Bob Wielgoszinski presented a document request for interpretation associated with welded repairs to UHT vessels. A task group of Walt Sperko, Bob Wielgoszinski (PM), and George Galanes will work on this inquiry. **SG RA Specific Minutes:** January 2014 Bob Wielgoszinski presented a document request for interpretation associated with welded repairs to UHT vessels. A task group of Walt Sperko, Bob Wielgoszinski (PM), and George Galanes will work on this inquiry.
January 2015 **(see attachment "B")**	**Main Committee Minutes** **Item Number: IN14-0401 NBIC Location: Part 3, 1.2 Attachment Pages 72-73** **General Description:** Interpretation questions regarding requirements for production impact tests after repair or alteration of a vessel **Subgroup:** Repairs and Altterations **Task Group:** Unknown **Meeting Action:** Mr. Galanes gave a report. The Subcommittee on Repairs and Alterations voted unanimously close this interpretation with no response. The Subcommittee on Repairs and Alterations opened a new action item NB15-1405 to

	address production impact tests. Mr. Wielgoszinski explained the subject of the interpretation and the new action item. The NBIC Committee voted unanimously to close this interpretation with no response. **SC RA Minutes:** January 2015 Mr. Wielgoszinski provided a report. After consideration, Mr. Wielgoszinski decided to withdraw the inquiry and requested a new item to address impact testing of P11B material. A motion was made to close this interpretation and open up an action Item. The new action item will be: **NB15-1405 Part 3-Impact testing of P-11B Material, SC R and A** (From IN14-0401) A task group was formed with Bob Wielgoszinski, as project manager and member Ben Schaefer, Walt Sperko, Monty Bost, and Dave Ford. (Attachment Pages 8-9)
July 2015	**No report. Not included on MC or RA agendas.**
January 2016	**No minutes available.**
July 2016	**No report. Not included on MC or RA agendas.**
January 2017	**No report. Not included on MC or RA agendas.**
July 2017	**No report. Not included on MC or RA agendas.**
January 2018	**No report. Not included on MC or RA agendas.**

Attachment "A"
This is the original request for interpretation in January 2014.

Request for Interpretation

Robert V. Wielgoszinski
Hartford Steam Boiler of CT

Item	IN 14-0401
Purpose	Code Interpretation & possible revision to present Code rules
Scope:	Repairs and alterations to vessels constructed of ferritic materials with tensile properties enhanced by heat treatment, i.e. Part UHT material.
Background	During the construction of liquid propane vessels it is typical to use SA-517 Gr. E (P-No. 11B) for use as heads and shells for propane transport tanks. The ASME Code requires the base materials, welding materials, and the WPS's to be qualified with impact tests. Also, the Code requires production impact testing to be performed. This is where the actual vessel material, actual filler materials, are welded with the actual WPS to be used in production, and the weld coupon is impact tested to meet the specified results of Section VIII. To do so, the Manufacturer of the vessel is sure to purchase enough extra base and filler material to perform these tests. When repairs / alterations are made to these vessels the NBIC requires the rules of the original construction Code to be followed. As such, any new material to be added to a vessel or any WPS's used or any filler metal used for the repair must then be impact tested and meet the results stated in Section VIII. Also, production impacts must therefore be made since this is a mandatory Section VIII requirement. This is usually accomplished by making a weld coupon out of existing material cut from the vessel and welding it to the new material to be added to the vessel, and then impact testing specimens from that coupon. But, not all repairs / alterations lend themselves the ability to take existing material from the vessel. If a small nozzle is added to the vessel, only a few inches of material is taken from the vessel. Or say a crack is to be weld repaired or there is weld metal build up to be made on some worn or wasted area. Then there is no extra material to be taken away from the vessel to run coupons for production impacts. Strict interpretation of the ASME Code would now require a piece of steel to be removed to run production impacts and then a flush patch installed over the area removed. Some individuals look at the words in NBIC, Part 3, Section 1, paragraph 1.2, where it says, "…the standard governing the original construction shall conform, <u>insofar as possible</u>…" gives one the leeway to not require production impacts because it's not possible. Others indicated that it is possible but not practical to cut perfectly good material out of a vessel when there is no need to. And others will say that the ASME clearly requires existing material to be removed to run impact tests. One thing is clear though, and that is there is lack of uniformity in applying these rules. So we are looking to the NBIC to provide some guidance in this matter. The Jurisdiction in this case is the US DOT, and 49CFR Chapter 1 § 180.413(a)(1) states that the NBIC is to be followed for repairs and modifications. DOT is also looking to the NBIC for clarification.

	Depending on the responses to the inquiry it may be prudent revise the Code to be more specific in this area of UHT materials.
Proposed Questions	**Question 1:** The NBIC Part 3 paragraph 1.2 states that a repair shall be carried out "insofar as possible to the section and edition of the ASME code most applicable to the work planned." If a vessel is constructed using SA-517-E (P-11B) material to ASME Section VIII Div. 1, where production and weld procedure impact tests were required during construction, would a repair to a crack in the shell require production and weld procedure impact testing under the NBIC? **Proposed Reply 1:** Yes. **Question 2:** If the answer to Question 1 is yes and there was no SA-517-E material from the original lot available, would the repair require the addition of new base material (e.g. a flush patch around the area of the crack) so that production impact tests could be performed with the original base metal to the new base metal? **Proposed Reply 1:** Yes. **Question 3:** If the vessel described in Question 1 was to be altered by adding an SA-675 (P-1) pump flange to the shell, would production and weld procedure impact tests be required using the same lot P-1 and P-11B base materials as used in the alteration? **Proposed Reply 1:** Yes.

Attachment "B"
This is the attachment that was included in the NBIC Minutes from the January 2015 meeting. It is identical to the original inquiry except for the new item number assigned as a revision.

Action Item NB15-1405 from Request for Interpretation

Robert V. Wielgoszinski
Hartford Steam Boiler of CT

Item	NB15-1405 *(was IN 14-0401)*
Purpose	Code Interpretation & possible revision to present Code rules
Scope:	Repairs and alterations to vessels constructed of ferritic materials with tensile properties enhanced by heat treatment, i.e. Part UHT material.
Background	During the construction of liquid propane vessels it is typical to use SA-517 Gr. E (P-No. 11B) for use as heads and shells for propane transport tanks. The ASME Code requires the base materials, welding materials, and the WPS's to be qualified with impact tests. Also, the Code requires production impact testing to be performed. This is where the actual vessel material, actual filler materials, are welded with the actual WPS to be used in production, and the weld coupon is impact tested to meet the specified results of Section VIII. To do so, the Manufacturer of the vessel is sure to purchase enough extra base and filler material to perform these tests. When repairs / alterations are made to these vessels the NBIC requires the rules of the original construction Code to be followed. As such, any new material to be added to a vessel or any WPS's used or any filler metal used for the repair must then be impact tested and meet the results stated in Section VIII. Also, production impacts must therefore be made since this is a mandatory Section VIII requirement. This is usually accomplished by making a weld coupon out of existing material cut from the vessel and welding it to the new material to be added to the vessel, and then impact testing specimens from that coupon. But, not all repairs / alterations lend themselves the ability to take existing material from the vessel. If a small nozzle is added to the vessel, only a few inches of material is taken from the vessel. Or say a crack is to be weld repaired or there is weld metal build up to be made on some worn or wasted area. Then there is no extra material to be taken away from the vessel to run coupons for production impacts. Strict interpretation of the ASME Code would now require a piece of steel to be removed to run production impacts and then a flush patch installed over the area removed. Some individuals look at the words in NBIC, Part 3, Section 1, paragraph 1.2, where it says, "...the standard governing the original construction shall conform, <u>insofar as possible</u>..." gives one the leeway to not require production impacts because it's not possible. Others indicated that it is possible but not practical to cut perfectly good material out of a vessel when there is no need to. And others will say that the ASME clearly requires existing material to be removed to run impact tests. One thing is clear though, and that is there is lack of uniformity in applying these rules. So we are looking to the NBIC to provide some guidance in this matter. The

	Jurisdiction in this case is the US DOT, and 49CFR Chapter 1 § 180.413(a)(1) states that the NBIC is to be followed for repairs and modifications. DOT is also looking to the NBIC for clarification. Depending on the responses to the inquiry it may be prudent revise the Code to be more specific in this area of UHT materials.
Proposed Questions	**Question 1:** The NBIC Part 3 paragraph 1.2 states that a repair shall be carried out "insofar as possible to the section and edition of the ASME code most applicable to the work planned." If a vessel is constructed using SA-517-E (P-11B) material to ASME Section VIII Div. 1, where production and weld procedure impact tests were required during construction, would a repair to a crack in the shell require production and weld procedure impact testing under the NBIC? **Proposed Reply 1:** Yes. **Question 2:** If the answer to Question 1 is yes and there was no SA-517-E material from the original lot available, would the repair require the addition of new base material (e.g. a flush patch around the area of the crack) so that production impact tests could be performed with the original base metal to the new base metal? **Proposed Reply 1:** Yes. **Question 3:** If the vessel described in Question 1 was to be altered by adding an SA-675 (P-1) pump flange to the shell, would production and weld procedure impact tests be required using the same lot P-1 and P-11B base materials as used in the alteration? **Proposed Reply 1:** Yes.

PART 3
SUPPLEMENT 4
REPAIR AND ALTERATION OF FIBER-REINFORCED THERMOSETTING PLASTIC PRESSURE EQUIPMENT

S4.1 SCOPE

…

S4.2 INSPECTOR QUALIFICATIONS

…

S4.3 TOOLS

The following tools may be required by the Inspector:
a) adequate lighting including overall lighting and a portable lamp for close inspections;
b) handheld magnifying glass;
c) Barcol hardness tester;
d) small pick or pen knife;
e) small quantity of acetone and cotton swabs;
f) camera with flash capability; ~~and~~
g) liquid penetrant testing kit;
h) depth and length gages; and
i) metallic tap tester (e.g. quarter dollar).

S4.4 LIMITATIONS

…

S4.5 REPAIR LIMITATIONS FOR FILAMENT WOUND VESSELS

When the MAWP is greater than 200 psig (1.38 MPa), and less than 1500 psi (10.34 MPa) field repair of filament wound ASME Code Section X, Class I vessels shall be limited to corrosion barrier or liner repairs only, provided there is access to the vessel interior. ~~No s~~Structural repairs~~, re-rating, or alterations~~ are allowed for filament wound ASME Code Section X, Class 1 vessels that have an MAWP equal to or greater than ~~200 psig (1.38 MPa)~~ 1500 psi (10.34 MPa) and Class III vessels in accordance with the requirements of S4.19.

S4.6 VESSELS FABRICATED USING ELEVATED TEMPERATURE CURED RESIN SYSTEMS

…
…
…

S4.18 REPAIR AND ALTERATION METHODS

…

S4.19 REPAIR OF HIGH PRESSURE FILAMENT WOUND VESSELS

S4.19.1 Scope
Types of damage that are addressed in this section include abrasion, cuts and scratches, impact, chemical, fire and heat, and weathering.

S4.19.2 Level of damage
- Level 1 damage, up to 0.010 inch, is repairable any time
- Level 2 damage, defined by the manufacturer (or up to 0.050 if not defined), is repairable with the manufacturer's concurrence

- Level 3 damage, defined by the manufacturer (or 0.050 or greater if not defined), is not repairable

Softening of the resin due to chemical attack, or charring due to exposure to fire, ~~are considered to be~~shall be defined as Level 3 damage.

The manufacturer's guidance for assessing damage depth and levels shall be followed if it conflicts with general guidelines in this document.

Table S4.19.2-1 Damage Levels and Assessment

Type of damage	**Definition**				**Comment**
		Level 1 — accept	**Level 2**	**Level 3 — reject**	
Cuts/scratches	A sharp impression where material has been removed or redistributed	When depth is less than 0.010 in	Depth from 0.010 in to the limit defined by the manufacturer, or 0.050 if not defined.	Greater than the limit defined by the manufacturer, or greater than 0.050 if not defined	
Abrasion	An area that is scuffed or worn thinner by rubbing or scraping	When depth is less than 0.010 in	Depth from 0.010 in to the limit defined by the manufacturer, or 0.050 if not defined.	Greater than the limit defined by the manufacturer, or greater than 0.050 if not defined	
Charring/soot	Blackening or browning of an area, burning of an area	Soot only, which washes off	Minor discolouration; manufacturer's recommendation	Charring	
Chemical attack, including stress corrosion cracking	Vessel is subjected to a chemical that softens or dissolves the composite	Residue may be cleaned off, no evidence of softening or dissolving.	Permanent discoloration.	Softening or dissolving of the material, cracking of the composite due to stress and chemical exposure	
Impact	Composite material was struck or hit; the resin has a frosted or smashed appearance	Damaged area is less than 0.20 in^2 and no other damage is apparent	Damage is uncertain, requiring the manufacturer's advice	Permanent deformation of cylinder or liner, evidence of underlying delamination	
Weathering	Composite affected by UV exposure and general weather	Minor gloss loss or chalking, only non-structural materials affected.	Structural laminate affected to a level less than defined by the manufacturer, or 0.050 inch.	Structural laminate affected to a level greater than defined by the manufacturer, or 0.050 inch	

S4.19.3 Thickness considerations
Damage to a depth greater than 5% of the structural laminate thickness is not repairable, and the vessel shall be removed from service. Depth of damage does not include paint thickness, or material designated by the manufacturer as protective (non-structural) rather than structural.

S4.19.4 Impact damage considerations
Impact damage may result in rejection, without possibility of repair, regardless of the measurable depth due to risk of internal fracture or delamination. Impact damage may be characterized by noting permanent deformation, softness or deflection of the surface, or localized surface crazing.

S4.19.5 Assessment of damage depth
All loose fibers and affected resin ~~are to~~shall be removed. This includes material that is softened by actions of chemicals or heat. Confirmation that the material remaining is sound shall be determined by a tap test, Barcol hardness measurement, and/or visual inspection.

S4.19.6 Repair procedure

a) Non-structural material, including paint, shall be removed from any area involved in the repair.
b) Resin used in structural repairs shall be compatible with the resin used to fabricate the vessel.
c) Cloth patches made of glass or carbon fiber may be used in the repair and to cover the repaired area.
    1) Cloth patches shall extend at least 0.5 inches beyond the edge of the repair area, and subsequent layers ~~must~~shall extend at least 0.25 inch beyond the edge of the previous patch.
    2) Total patch thickness shall not be more than 5% of the structural thickness of the original laminate.
d) A layer of fiber wound continuously in the hoop direction may be applied over the repair.
e) Non-structural material may be applied to the repaired area for protection if originally used in the vessel design.
f) The repaired area may be covered with epoxy, polyurethane, or other compatible paint.
g) The repaired area shall be cured at a temperature that will not degrade the resin in the vessel. It may be cured prior to applying any non-structural material or paint.
h) The repair shall be confirmed by either:
    1) A tap test or Barcol hardness measurement conducted on the structural material after cure and prior to applying any non-structural material or paint, or
    2) A Modal Acoustic Emission test, in accordance with Part 2 S10.10, conducted after cure of the structural material
i) A hydrostatic proof test shall be conducted following confirmation of the repair.

S4.19.7 Acceptance of the vessel for return to service

The repair shall meet the repair confirmation requirement (i.e. confirmation of soundness using the tap test or Barcol hardness measurement, or confirmation using MAE). There shall be no delamination of the repaired area resulting from ~~the~~a hydrostatic proof test in accordance with the Design Specification. A vessel that does not meet the requirements of the repair confirmation or hydrostatic proof test shall not be returned to service.

Item 17-137
Part 3, S4.18.2.1 2) d. 2. and 4.

1) …

2) Applying Test Patches to Verify Adequate Surface Preparation

a. Test patches should be applied to any substrate that will require a secondary bond to determine the integrity of the primer bond prior to the application of the laminate.

b. The subsequent steps shall be followed:

1. Apply the primer (0,003 -0.005 in. (0.08 to 0.13 mm)) to the prepared surface, and allow primer to cure.

2. Coat the primed surface with the same resin to be used in the laminate repair. Apply 4 in. (100 mm) x 14 in. (360 mm) piece of polyester, such as Mylar®, strip to one edge of primed area. Allow the polyester film to protrude from beneath the patch.

3. Apply two layers of 1-1/2 oz/sq. ft (0.46 kg/sq. m) chopped strand mat saturated with the same resin that will be used for the repair. Mat shall be 12 in. (305 mm) x 12 in. (305 mm) square.

4. Allow the mat layers to cure completely, this may be verified by checking the hardness of the laminate.

5. Pry patch from surface using a screwdriver, chisel, or pry bar.

6. A clean separation indicates a poor bond.

7. Torn patch laminate or pulled substrate indicates that the bond is acceptable.

c. If the bond is not adequate, go back to step a) and repeat the procedure.

Note: If the repair area is smaller than the test patch dimensions, decrease the test patch size accordingly.

d. As a last resort, if the previous procedure does not provide an adequate bond, the permeated laminate must be handled differently using the following procedure:

1. Hot water wash the equipment.

2. Abrasive blast ~~with #3 sand, or equal~~ to achieve a 0.003 to 0.005 in. (0.08 to 0.12 mm) anchor pattern, and allow to completely dry.

3. Prime with the recommended primer, an area 12 in. (305 mm) x 12 in. (305 mm) and apply a test patch.

4. Prime a second spot 12 in. (305 mm) x 12 in. (305 mm) and prime with a recommended ~~epoxy resin~~ alternate primer.

5. Allow this primer to cure.

Part 3, S4.18.2.2 2)

1) …

2) Note that any cracks, delaminations, or permeated surfaces must be removed. If the damage is deeper than the corrosion barrier and the material removed reaches the structural laminate, the vessel is not repairable. An adequate size abrasive or proper sanding disc must be used to obtain a ~~0.003 to 0.005~~ 0.002 to 0.003 in (0.05 to 0.08 mm) anchor pattern to the area that requires the repair.

3) Preparation of any surface requires that basic rules, common to all substrates, be followed. These rules are as outlined below:

   a. Surface must be free of contaminants;

   b. Surface must be structurally sound;

   c. Surface must have adequate anchor pattern;

   d. Surface must be dry;

   e. Surface must be primed with recommended primer.

   Note: After the surface has been properly prepared, it must be kept clean and dry until laminating can be started. Dust, moisture, or traces of oil that come in contact with the surface may act as a mold release or act to inhibit the cure and prevent a good secondary bond. Laminating should be done within two hours of the surface preparation.

NBIC Subcommittee R&A Action Block

Subject	Code Revision to Part 3, 2.5.3.6		
File Number	NB18-13	**Prop. on Pg.**	2
Proposed Revision			
Statement of Need	The revision is to add a new Welding Method 7 to allow for dissimilar metal welding of Grade 91 to austenitic steels and low alloy steels in a boiler setting and limited to butt welds, in accordance with approved welding method 6.		
Project Manager	John Siefert/G. Galanes		
SubGroup Negatives		**SG Meeting Date**	

Background;
Welding Method 7 is being introduced to permit dissimilar metal weld repair with no PWHT between Grade 91 boiler tubes to austenitic steels and low alloy ferritic steels. This action permits DMW of Grade 91 tubes within the boiler setting following welding method 6 with no PWHT.

NB Item 18-13

2.5.3.7 WELDING METHOD 7

This repair method provides requirements for dissimilar metal welding (DMW) of Grade 91 tube material to either austenitic or low alloy ferritic steel tubing within the steam boiler setting. When using this welding method, the following applies:

a) This method is limited to butt welds in tubing NPS 5 (DN 125) or less in diameter and ½ in. (13 mm) or less in wall thickness for which the applicable rules of the original code of construction did not require notch toughness testing;

b) Application shall be limited to only boiler tube repairs at a location internal to the boiler setting;

c) Upon the completion of weld repair, the repair area shall be kept above the dew point temperature so that condensation does not form on the repair surface before returned to service or a moisture-barrier coating shall be applied to the surface.

For DMW of Grade 91 to austenitic steel steel tubing;

1) The materials shall be limited to P-No 15E, Group 1, Grade 91, creep strength enhanced ferritic steel (CSEF) joined to either P-No. 8, P-No. 42, P-No. 43, or P-No. 45, as permitted for welded construction by the applicable rules of the original code of construction.~~.~~

2) The welding shall be limited to the SMAW and GTAW processes, manual or automatic, using suitably controlled maintenance procedures to avoid contamination by hydrogen producing sources. The surface of the metal shall be free of contaminants and kept dry.

3) The welding procedure qualification test coupon shall be P-No 15 E, Group 1, Grade 91 joined to either P-No. 8, P-No. 42, P-No. 43, or P-No. 45 and as required for the repair application.

4) Qualification thickness limits of base metal and weld deposit thickness shall be in accordance with ASME Section IX, QW-451.

5) The Welding Procedure Specification (WPS) shall be qualified in accordance with the requirements of ASME Section IX. No postweld heat treatment shall be applied to the test coupon. Additionally, the WPS shall include the following requirements:

a). The minimum preheat for the GTAW process shall be 200°F (100°C). The minimum preheat for the SMAW process shall be 300°F (150°C). The preheat temperature shall be checked to ensure the minimum preheat temperature is maintained during welding and until welding is completed.

The maximum interpass temperature shall be 550°F (290°C).

b). When the SMAW process is specified for a fill pass layer, the electrode diameter is restricted to a maximum size of 1/8 in. (3.2 mm). When the GTAW-process is specified any limits in filler size is to be shown on the WPS.

c). Regardless of the welding process (SMAW or GTAW), only the use of stringer beads shall be permitted.

d). The filler metal shall be limited to an austenitic, nickel-base filler metal to those assigned to F-number 43 in ASME Section IX, QW-432 and limited to the following consumables: ERNiCr-3 (e.g., Filler Metal 82), ENiCrFe-3 (e.g., INCONEL Welding Electrode 182), ENiCrFe-2 (e.g., INCO-WELD A), ASME B&PV Code Cases 2733 and 2734 (e.g. EPRI P87);
~~e. A martensitic, iron-base filler metal having a designation F-No. 4 or F-No. 6 and limited to the following consumables: E8015-B8, E8018-B8 or ER80S-B8.~~

For DMW of Grade 91 to low alloy (P-No 5A) steel tubing:

1) The materials shall be limited to P-No 15E, Group 1, Grade 91, creep strength enhanced ferritic steel (CSEF) joined to P-No. 5A steel.

2) The welding shall be limited to the SMAW and/or GTAW processes, manual or automatic, using suitably controlled maintenance procedures to avoid contamination by hydrogen producing sources. The surface of the metal shall be free of contaminants and kept dry.

3) The welding procedure qualification test coupon shall be P-No 15 E, Group 1, Grade 91 joined to P-No. 5A steels.

4) Qualification thickness limits of base metal and weld deposit thickness shall be in accordance with ASME Section IX, QW-451.

5) The Welding Procedure Specification (WPS) shall be qualified in accordance with the requirements of ASME Section IX. No postweld heat treatment shall be applied to the test coupon. Additionally, the WPS shall include the following requirements:

(a). The minimum preheat for the GTAW process shall be 200°F (100°C). The minimum preheat for the SMAW process shall be 300°F (150°C). The preheat

temperature shall be checked to ensure the minimum preheat temperature is maintained during welding and until welding is completed. The maximum interpass temperature shall be 550°F (290°C).

(b). When the SMAW process is specified for a fill pass layer, the electrode diameter is restricted to a maximum size of 1/8 in. (3.2 mm). When the GTAW-process is specified any limits in filler size is to be shown on the WPS.

(c). Regardless of the welding process (SMAW or GTAW), only the use of stringer beads shall be permitted.

(d). The filler metal shall be limited to a martensitic, iron-base filler metal to those assigned to F-number 4 or F-number 6 in ASME Section IX, QW-432 and limited to the following consumables: E8015-B8, E8018-B8 or ER80S-B8.

18-75	Michael Quisenberry	18-75 - Quisenberry - 7-16-19 (2).docx

Voting Sessions:

Voting Window	Committee	Vote Result	Votes Approved	Votes Disapproved	Votes Abstention	Votes Not Voting
09/17/2019 to 10/26/2019	NBIC Main Committee	Fail	3	9	2	0

Ballot Description:

This item makes changes to NBIC Part 3, 3.3.4.6. Please cast your votes by October 25, 2019.

Member Votes:

Committee Member: Joel Amato **Vote Date:** 2019-09-18 **Vote:** Disapproved **Uploads:**

Member Comment: I believe the reference to paragraph 4.2 requires the inspector to be involved. I agree, in the last sentence the WILL must be a SHALL. With this change I would vote to approve.

Committee Member: Donald Cook **Vote Date:** 2019-09-23 **Vote:** Disapproved **Uploads:**

Member Comment: Part 3 4.2a uses the term "original welds" as opposed to Par 3 3.3.4.6a which uses the term "original code of construction". The proposal will make a reference to a paragraph that is less informative. What is the need to strike out the existing language or than the should to shall and re-phrasing the "flush welded" to "welded flush"?

Committee Member: Paul Edwards **Vote Date:** 2019-09-25 **Vote:** Disapproved **Uploads:**

Member Comment: I am voting Disapproved pending response to the posted concerns. A description of the need and justification for this revision is also requested.

Committee Member: George Galanes **Vote Date:** 2019-09-19 **Vote:** Approved **Uploads:**

Committee Member: Jim Getter **Vote Date:** 2019-09-18 **Vote:** Disapproved **Uploads:**

Member Comment: This change does not include the original requirement for the AI approval or involvement.

Committee Member: Craig Hopkins **Vote Date:** **Vote:** **Uploads:**

Committee Member: Donnie LeSage **Vote Date:** 2019-09-25 **Vote:** Disapproved **Uploads:**

Member Comment: Agreed that if the last sentence would change the WILL to SHALL, I would approve.

Committee Member: Brian Morelock **Vote Date:** 2019-10-16 **Vote:** Disapproved **Uploads:**

Member Comment: I am voting disapproved on this item so the current negatives and comments on this action can be resolved and the item can be updated.

Committee Member: Venus Newton **Vote Date:** **Vote:** **Uploads:**

Committee Member: James Pillow **Vote Date:** 2019-10-02 **Vote:** Abstention **Uploads:**

Member Comment: I abstain awaiting resolution of previous negatives and comments.

Committee Member: H. Michael Richards **Vote Date:** **Vote:** **Uploads:**

Committee Member: James Sekely **Vote Date:** 2019-09-17 **Vote:** Approved **Uploads:**

Member Comment: 3.3.4.6 a) 1) last sentence; change will to shall (or should)so that it reads: "Nondestructive examination shall (or should) be performed ...?

Committee Member: Robby Troutt **Vote Date:** 2019-10-03 **Vote:** Disapproved **Uploads:**

Member Comment: Agree, "will" needs to be changed to "shall".

Committee Member: Melissa Wadkinson **Vote Date:** 2019-10-03 **Vote:** Abstention **Uploads:**

Member Comment: Abstain awaiting resolution to comments.

Committee Member:	Milton Washington	**Vote Date:**	2019-10-10	**Vote:**	Approved	**Uploads:**	
Committee Member:	Paul Welch	**Vote Date:**	2019-10-23	**Vote:**	Disapproved	**Uploads:**	
Member Comment:	The Inspector involvement needs to be there. Agree with changing should to shall						
Committee Member:	Robert Wielgoszinski	**Vote Date:**	2019-10-16	**Vote:**	Disapproved	**Uploads:**	
Member Comment:	I agree with the "shall" vs "should" changes, but I still disapprove. I agree with Mr. Cook and Mr Edwards negatives. Why is this change needed?						

3.3.4.6 PATCHES

a) Flush Patches

1) The weld around a flush patch shall be a full penetration weld and the accessible surfaces shall be ground flush where required by the applicable original code of construction. Examples of ~~flush welded~~ welded flush patches are shown in NBIC Part 3, Figure 3.3.4.6-a. ~~The welds shall be subjected to the nondestructive examination method used in the original code of construction or an alternative acceptable to the Inspector~~ ~~and, where required, the Jurisdiction~~. Nondestructive examination will be performed in accordance with the requirements from NBIC Part 3, Section 4.2.~~.~~

2) Before installing a flush patch, ~~the the~~ defective material ~~should~~ ~~should~~ shall be removed until sound material is reached. The patch ~~should~~ ~~should~~ shall~~shall~~ be ~~rolled~~ formed to the proper shape or curvature. The edges ~~should~~ ~~should~~ shall~~shall~~ align without overlap. In stayed areas, the weld seams should come between staybolt rows or riveted seams. Patches shall be made from a material whose composition and thickness meet the intended service. Patches may be any shape or size. If the patch is rectangular, a minimum radius of not less than three times the material thickness shall be provided at the corners. Square corners are not permitted. The completed welds shall meet the requirements of the original code of construction.

b) Tube Patches

In some situations it is necessary to weld a flush patch on a tube, such as when replacing tube sections and accessibility around the complete circumference of the tube is restricted, or when it is necessary to repair a small bulge. This is referred to as a window patch. Suggested methods for window patches are shown in NBIC Part 3, Figure 3.3.4.6-b.

FIGURE 3.3.4.6-a

FLUSH PATCH CONFIGURATIONS IN UNSTAYED AREAS

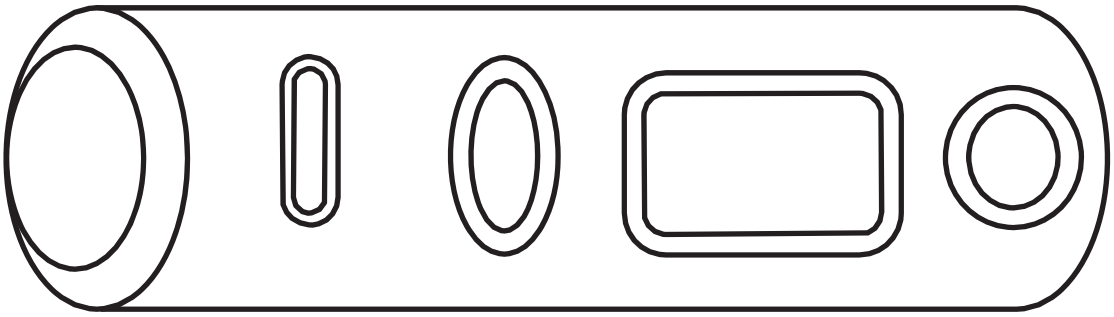

FLUSH PATCHES IN STAYED AREAS

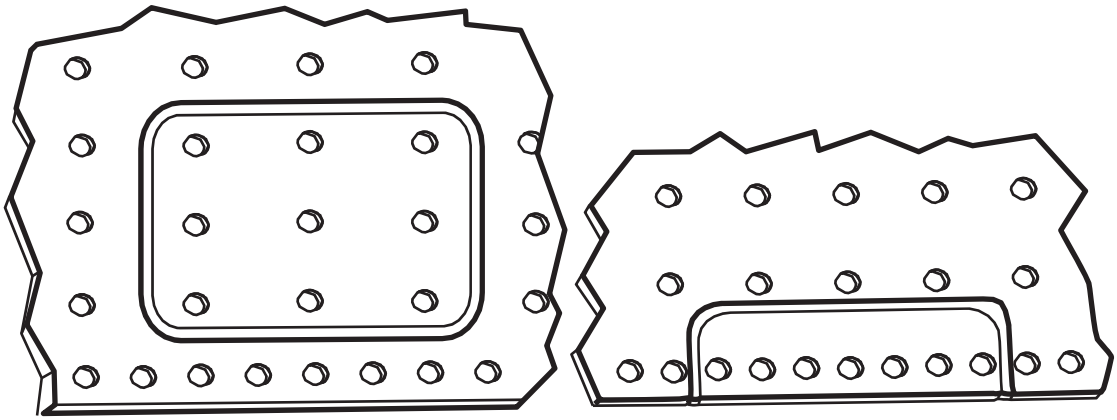

Item 18-95

Existing wording:

a) Most steam locomotive boilers were manufactured in the first half of the 20th century or before. The calculations, formula, and shop practices used are now distant history and quite difficult to obtain. The rules for riveted construction were last published by ASME in Section I Code, 1971 Edition.

Proposed wording:

a) Most steam locomotive boilers were manufactured in the first half of the 20th century or before. The calculations, formula, and shop practices used are now distant history and quite difficult to obtain. The rules for riveted construction were last published by ASME in Section I Code, 1971 Edition. **Currently, ASME, Section I, Part PR and Part PL, now govern new riveted construction and steam locomotive boiler construction. These rules should be used for repairs and alterations when appropriate.**

Background for Interpretation 18-100

Task Group PM – David Martinez;

Task Group members: Marty Russel and Nathan Carter

Item Number: 18-100 NBIC Location: Part 3, 3.3.2 Attachment Page 44

General Description: Revision adding (plugging) heat exchanger tubes with an outside diameter of ¾" or smaller to NBIC Part 3.3.2 Routine Repairs

Subgroup: Repairs and Alterations

Task Group: David Martinez (PM)

January 2019 Meeting Action: Progress Report: Mr. Martinez reported on this item and presented interpretations (98-04 and 98-29) that may satisfy the revision request, however after a presentation from TEiC regarding the use of explosive welding of tubes to be considered as a routine repair, Mr. Martinez recommend this be considered progress report to continue working to address explosive welding as a Routine Repair.

3.3.2 ROUTINE REPAIRS

a) Routine repairs are repairs for which the requirements for in-process involvement by the Inspector and stamping by the "R" Certificate Holder may be waived as determined appropriate by the Jurisdiction and the Inspector. All other applicable requirements of this code shall be met. Prior to performing routine repairs, the "R" Certificate Holder should determine that routine repairs are acceptable to the Jurisdiction where the pressure-retaining item is installed;

b) The Inspector, with the knowledge and understanding of jurisdictional requirements, shall be responsible for meeting jurisdictional requirements and the requirements of this code;

c) The "R" Certificate Holder's Quality System Program shall describe the process for identifying, controlling, and implementing routine repairs. Routine repairs shall be documented on Form R-1 with this statement in the Remarks section: "Routine Repair";

d) Alternative welding methods without postweld heat treatment as described in NBIC Part 3, 2.5.3 shall not be used for routine repairs.

(Example of proposed additional category to examples of Routine Repairs – paragraph e)

e) The following repairs may be considered as routine repairs and shall be limited to these categories:

1) Welded repairs or replacements of valves, fittings, tubes, or pipes NPS 5 (DN 125) in diameter and smaller, or sections thereof, where neither postweld heat treatment nor

NDE other than visual is required by the original code of construction. This includes their attachments such as clips, lugs, skirts, etc., but does not include nozzles to pressure-retaining items;

2) The addition or repair of nonload bearing attachments to pressure-retaining items where postweld heat treatment is not required;

3) Weld buildup of wasted areas in heads, shells, flanges and fittings not exceeding an area of 100 in.2 (64,520 mm2) or a thickness of 25% of nominal wall thickness or 1/2 in. (13 mm), whichever is less;

4) Corrosion resistance weld overlay not exceeding 100 in.2 (64,520 mm2); ~~and~~

5) Seal welding a mechanical connection for leak tightness where by-design, the pressure retaining capability is not dependent on the weld for strength and requires no postweld heat treatment; and

6) Plugging of heat exchanger tubes ¾ in. outside diameter and smaller when explosive plugging is used as method of plugging tubes.

Background Interpretation

INTERPRETATION 15-04

Subject: Part 3, Section 3

Edition: 2015

Question: Is explosion welding of plugs into leaking heat exchanger tubes considered a repair per the NBIC Part 3?

Reply: Yes.

Support for Consideration of the Proposed Action

ASME Section IX – 2019 (Addresses Procedure and Performance Qualification for Explosion Welding heat exchanger tubes to tubesheets, but not the plug to the tube)

QW-193 TUBE-TO-TUBESHEET TESTS
When the applicable Code Section requires the use of this paragraph for tube-to-tubesheet demonstration mockup qualification, QW-193.1 through QW-193.1.3 shall apply.

QW-193.1 Procedure Qualification Specimens. Ten mockup welds are required for qualifying each tube-to tubesheet welding procedure. The mockup assembly shall essentially duplicate the tube-to-tubesheet weld joint design to be used in production, within the limits of the essential variables of QW-288. The mockup test assembly shall be prepared with the tubesheet element having a thickness not less than the lesser of the thickness of the production tubesheet or 2 in. (50 mm). For tube-to-tubesheet welds to clad tubesheets, the cladding or overlay may be represented by a base material with a chemical composition that is essentially equivalent to the cladding composition. All welds in the mockup assembly shall be subjected to the following tests and shall meet the applicable acceptance criteria.

QW-193.1.1 Visual Examination. The accessible surfaces of the welds shall be examined visually with no magnification required. The welds shall show complete fusion, be free from visual cracks or porosity indications,
and have no evidence of burning through the tube wall.

QW-193.1.2 Liquid Penetrant. The liquid penetrant examination shall meet the requirements of Section V, Article 6. The weld surfaces shall meet the requirements of QW-195.2.

QW-193.1.3 Macro-Examination. The mockup welds shall be sectioned through the center of the tube for macro-examination. The four exposed surfaces shall be smoothed and etched with a suitable etchant (see QW-470) to give a clear definition of the weld and heat-affected zone. Using a magnification of 10X to 20X, the exposed cross sections of the weld shall confirm
(a) minimum leak path dimension required by the design
(b) no cracking
(c) complete fusion of the weld deposit into the tubesheet and tube wall face

Table QW-288.2
Essential Variables for Procedure Qualification of Tube-to-Tubesheet Welding (Explosion Welding)

Paragraph		Brief of Variables
QW-403 Base Metals	.35	ϕ Tube thickness
QW-410 Technique	.82	ϕ Pressure application
	.83	ϕ Explosive
	.84	ϕ Distance charge to tubesheet
	.85	ϕ Specified clearance

Legend:
ϕ Change

QW-410.83 A change in the type of explosive or a change in the energy content greater than ±10%.

QW-410.84 A change in the distance between the explosive charge and the tubesheet face greater than ±10%.

QW-410.85 A change in the specified clearance between the tube and the tubesheet greater than ±10%.

QW-193.2 Performance Qualification Specimens.
A minimum of five mockup tube-to-tubesheet welds are required to qualify each welder or welding operator. The same rules as those applicable for procedure qualification (QW-193.1) shall be followed, with the following additional requirements and exceptions:
(a) The essential variables in QW-387 shall apply.
(b) Essential performance qualification variables applicable for each welding process listed in QW-350 or QW-360 shall also be observed in addition to the variables of Table QW-388.
(c) Postweld heat treatment may be omitted.

Only one mockup weld is required to renew a welder's or welding operator's qualification when that qualification has expired or has been revoked per the requirements of QW-322.1.

Logic to consider motion for approval:

- Explosion welding to plug leaking tubes is supported by qualified written welding procedures and welder qualification procedures compared to other mechanical tube-plugging methods that are performed with no NBIC guidance.
- Explosion welding does not rely on fusion to join the two materials. It is a pressure weld in which the explosive force joins the two materials. Unlike fusion welding that is allowed in other examples of Routine Repairs, there is no heat affected zone, and PWHT is not needed nor required.
- The majority, if not all explosion tube plugging is performed on tubes ¾" and smaller, and typically under emergency conditions. No Inspector involvement would be required if this specific category was added to the categories of Routine Repairs
- The explosion tube-plugging method for tubes ¾" and smaller would be more cost and schedule effective and is proven to be a reliable method for plugging leaking heat exchanger tubes for owners and users.

Note: The only realistic test upon completion of explosion tube-plugging is a pressure test.

Committee Member:	Donnie LeSage	**Vote Date:**	2019-11-19	**Vote:**	Disapproved	**Uploads:**	
Member Comment:	I agree with Mr. Pillow. The Background stated "Therefore revision to the Glossary definition is needed". I don't see the proposed Glossary definition change.						

Committee Member:	James Pillow	**Vote Date:**	2019-10-30	**Vote:**	Disapproved	**Uploads:**	
Member Comment:	I agree with the proposed revision to 1.6.3, but the proposal does not include a revision to the Glossary as indicated in the Background.						

Committee Member:	Milton Washington	**Vote Date:**	2019-11-22	**Vote:**	Disapproved	**Uploads:**	
Member Comment:	I agree with Mr. Pillow that the proposal should include the glossary change as well.						

Item 19-11 – Hellman – 7-15-2019

Location: Section 9 of Parts 1, 2, 3 and 4

Explanation of Need: Review the use of "Authorized Nuclear Inspection Agency" within the NBIC.

Background: An ANIA can not be an Inservice AIA since Endorsements for nuclear inspectors are issued only to new construction AIA's. The requirements for qualified Authorized Nuclear Inspectors/Supervisors are clearly specified in NB-263, RCI-1. Therefore revision to the Glossary definition is needed to clarify this requirement for the NR Accreditation Program.

Proposed Revision:

1.6.3 PREREQUISITES FOR ISSUING A NATIONAL BOARD "NR" CERTIFICATE OF

AUTHORIZATION

Before an organization can obtain a National Board "NR" Certificate of Authorization, the organization shall:

a) Have and maintain an inspection agreement with an Authorized Nuclear Inspection Agency accepted in accordance with NB-360, National Board Acceptance of Authorized Inspection Agencies (AIA) Accredited by the American Society of Mechanical Engineers (ASME) with authorization to perform repair and alteration acceptance inspections. ~~or accredited in accordance with NB-369, Accreditation of Authorized Inspection Agencies (AIA) Performing Inservice Inspection Activities and Qualification of Inspectors of Boilers and Pressure Vessels~~.
b) Have a written Quality Assurance Program that complies with the requirements of this section and address all controls for the intended category and scope of activities.
c) Have a current edition of the NBIC.

Item 19-16: NBIC Part 3, 3.2.2 e)
Submitted by: Eben Creaser eben.creaser@gnb.ca

Explanation of Need: This wording of this clause is causing confusion. I have had multiple instances where owners have requested to purchase welded replacement parts directly and read this clause with the belief that they can purchase a replacement part for in some cases a welded pressure part for an ASME Section I boiler and safe money by having the fabricator not Hydro test as per Section I even when it was not impractical to have the testing performed.

Background Information: The second sentence of 3.2.2 seems to provide optional provisions that contradict the mandatory requirement stated in the first sentence that requires 3.2.2 c) or d) parts to be pressure tested by the original code of construction. If this is the intent of the committee then the clause should be reworded to add an "or" between the sentences. The wording could also be understood to mean that all parts addressed in 3.2.2 c) or d) have to be pressure tested. But then the second sentence alludes to an optional requirement, it's just not clear.

Proposed Text:
If the intent of this clause is to provide optional pressure test requirements for parts then;

e) Replacement parts addressed by 3.2.2 c) or d) above shall receive a pressure test as required by the original code of construction prior to installation, or, when accepted by the owner, the Inspector and, where required, the Jurisdiction, parts ~~. If replacement parts have not been pressure tested as required by the original code of construction prior to installation they~~ may be installed without performing the original code of construction pressure test provided the owner, the Inspector and, when required, the Jurisdiction accept the use of one or a combination of the examination and test methods shown in Part 3, Section 4, paragraph 4.4.1 (for repairs) or 4.4.2 (for alterations). The R Certificate Holder responsible for completing the R Form shall note in the Remarks section of the R Form the examination(s) and test(s) performed, and the reason the replacement part was not tested in accordance with the original code of construction.

SUPPLEMENT 4
REPAIR AND ALTERATION OF FIBER-REINFORCED THERMOSETTING PLASTIC PRESSURE EQUIPMENT

S4.1 SCOPE

a) This supplement provides requirements and guidelines that apply to repairs and alterations to fiber-reinforced pressure-retaining items.

b) The letters "RP" shall be included on the "R" *Certificate of Authorization* for those organizations authorized to perform repairs/alterations of fiber-reinforced plastic pressure equipment.

S4.2 ~~INSPECTOR~~ QUALIFICATIONS FOR "R" ~~STAMP~~CERTIFICATE HOLDER DESIGNEE

The "R" Stamp Holder~~'s inspector shall have~~ shall designate an employee who will have the responsibility of verifying the repair and/or alteration activity meets the requirements of the NBIC. The designee shall have the following qualifications:

a) No fewer than five years of current verifiable documented experience in an occupational function that has a direct relationship to Reinforced Thermoplastic (RTP) fabrication and inspection, following customer or national standards, and be directly involved in the following activities:

   1) the development of plans, drawings, procedures, inspection requirements, acceptance criteria, and personnel qualification requirements;

   2) fabrication, construction, and supervision of personnel in the production of assemblies or subassemblies;

   3) detection and measurement of nonconformities by application of visual or other nondestructive evaluation processes to written procedures;

   4) supervision of personnel engaged in material and component examination;

   5) repairs of equipment or supervision of personnel performing repairs;

   6) preparation of written procedures for assembly, acceptance, nondestructive evaluation, or destructive tests;

   7) qualification of secondary bonders, laminators, and welders to applicable codes, standards, or specifications;

   8) operation techniques or activities used to fulfill quality control requirements for RTP fabrication or assembly; and

   9) train the occupational skills of fabrication or assembly of RTP equipment.

b) The ~~Inspector~~ designee shall meet the following visual and educational requirements:

   1) be able to read a Jaeger Type No. 1 standard chart at a distance of not less than 12 in. (305 mm);

   2) be capable of distinguishing and differentiating contrast between colors;

   3) have visual acuity checked annually to assure natural or corrected near distance vision; and

   4) be a high school graduate or hold a state or military approved high school equivalency diploma.

c) The ~~employer of the inspector~~"R" Certificate Holder shall certify that the ~~employee~~ designee complies with the above qualification requirements.

S4.3 TOOLS

The following tools may be required by the ~~Inspector~~"R" Certificate~~Stamp~~ Holder's designee.:

a) adequate lighting including overall lighting and a portable lamp for close inspections;
b) handheld magnifying glass;
c) Barcol hardness tester;
d) small pick or pen knife;
e) small quantity of acetone and cotton swabs;
f) camera with flash capability; and
g) liquid penetrant testing kit.

S4.4 LIMITATIONS

All field work shall be limited to secondary bonding.

Item Number: 19-27, SG Historical
Part 3, S2.13.14.3

S2.13.14.3 REPAIR OF FUSIBLE PLUG OPENING

a) Threaded holes with damaged threads may be repaired by re-tapping or weld buildup and rethreading the threads shall be removed prior to welding.

b) Threaded opening with damaged threads that ~~can not~~cannot be repaired by re-tapping or re-threading should be repaired by welding a flush patch or half coupling connection to the sheet.

c) The half coupling connection shall be such a size as to not interfere with proper operation of the fusible plug. The half coupling shall be welded flush to the fire side using a full penetration weld. The half coupling must not project higher than ½ inch (13 mm) from the water side (See Figure NBIC Part 3, S2.13.14.3-a).

d) Flush patch type repairs are to be installed in accordance with S2.13.9.3 and S2.13.10.3 (See Figure S2.13.14.3-b).

e) A fusible plug shall be of such length that when installed it shall project at least ¾ inch (19 mm) on the water side of the plate, tube, or flue. It shall extend through the plate, tube, or flue on the fire side as little as possible but not more than 1 inch (25 mm).

FIGURE S2.13.14.3-a
FUSIBLE PLUG REPAIR USING HALF COUPLING

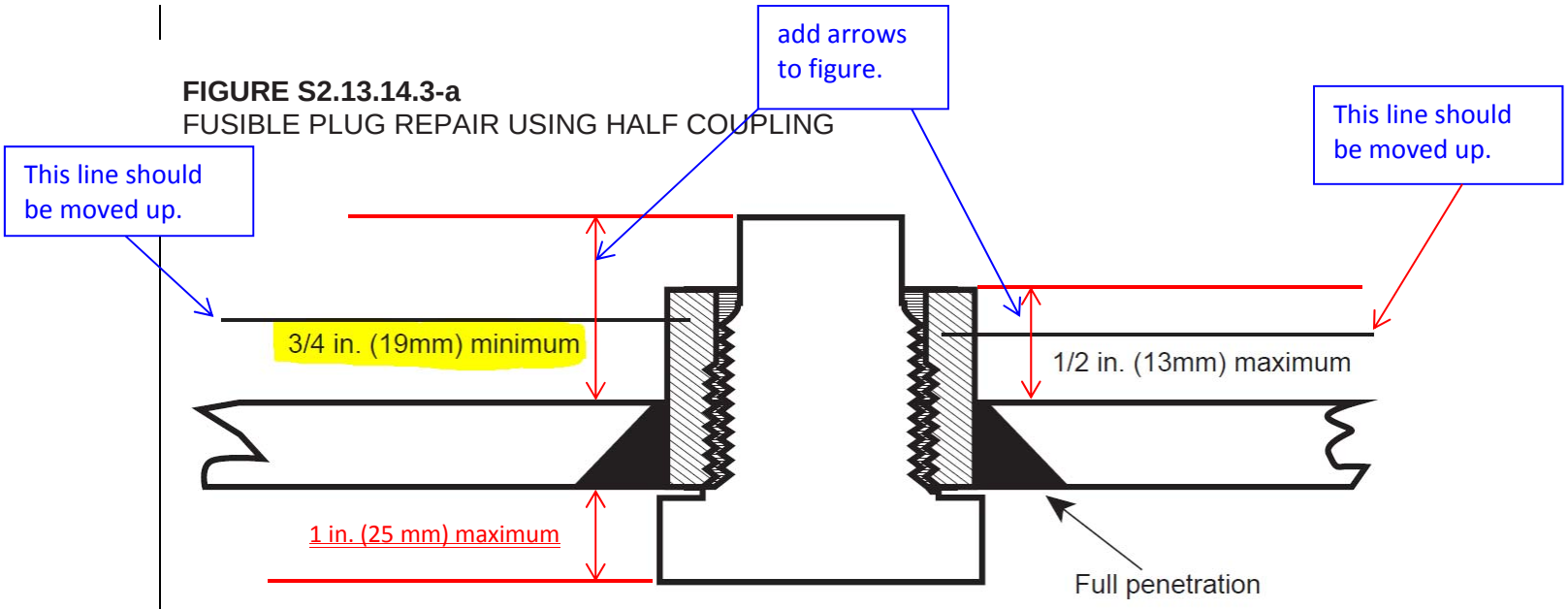

Item 19-55

7/9/2019

Request for NBIC Part 3, Section 4 Revision

Purpose	To change the maximum test pressure requirement when performing liquid pressure tests of repair and alteration activities. This proposal was initially part of item NB16-2603, which proposed changes to 4.4.1 a) 1) and 4.4.2 a) 1). However, only the changes to 4.4.1 a) 1) made it into the 2019 NBIC.
Scope:	To revise paragraph 4.4.2 a) 1) of the NBIC Part 3 to require maximum liquid test pressure be in accordance with the original construction Code.
Background	For liquid pressure testing of repairs and alterations, paragraph 4.4.2(a)(1) of the NBIC Part 3 require a maximum test pressure of 150% of the maximum allowable working pressure (MAWP) stamped on the pressure retaining item, as adjusted for temperature. However, repairs and alterations of DOT vessels are required to be tested at a <u>minimum</u> of 150% of design pressure which makes it virtually impossible to comply with the NBIC maximum requirement. Further, repairs and alterations to DOT ammonia transport vessels made from UHT materials require a test pressure of 200% of design pressure (49CFR 180.413(b)(6) and 177.337-16). Obviously, this is in violation of the NBIC Part 3. Paragraph UG-99 of ASME Section VIII, Div. 1 does not not specify a maximum test pressure for hydrostatic tests. Therefore, it is p[proposed that paragraph 4.4.2(a)(1) be revised to <u>remove</u> the maximum test pressure of 150% of MAWP. The paragraph will have new wording (similar to existing paragraph 4.4.1(b) for pneumatic testing) which states test pressure shall not to exceed the maximum test pressure of the original code of construction.
Proposed Revision	See page 2 for proposed revisions.

EXISTING PARAGRAPH 4.4.2(a)(1) of NBIC Part 3

4.4.2 TEST OR EXAMINATION METHODS APPLICABLE TO ALTERATIONS

Based on the nature and scope of the alterations activity, one or a combination of the following examination and test methods shall be applied to alterations and replacement parts used in alterations.

a) Liquid Pressure Test

Pressure testing of alterations shall meet the following requirements:

1) A pressure test as required by the original code of construction shall be conducted. ~~The test pressure shall not exceed 150% of the maximum allowable working pressure (MAWP) stamped on the pressure-retaining item, as adjusted for temperature.~~ When the original test pressure included consideration of corrosion allowance, the test pressure may be further adjusted based on the remaining corrosion allowance. The pressure test for replacement parts may be performed at the point of manufacture or point of installation;

PROPOSAL OF REVISION TO 4.4.2(a)(1)

1) A pressure test as required by the original code of construction shall be conducted. The test pressure shall not exceed the maximum liquid test pressure of the original code of construction. When the original test ~~t~~pressure included consideration of corrosion allowance, the test pressure may be further adjusted based on the remaining corrosion allowance. The pressure test for replacement parts may be performed at the point of manufacture or point of installation.

Item 19-59: Request for Revision to NBIC Part 3, 3.2.2 e)

Purpose	ASME has issued interpretation I-16-1 and revised PW-54 to clarify that Section I does not contain requirements for the hydrostatic testing of replacement parts. Based on this, the language in 3-3.2.2 e) "… as required by the original code of construction" could be interpreted to mean that pressure testing of parts is not required because Section I does not require testing of replacement parts. On review, this was not the Committee's intent when clause e) was added to 3.2.2. The proposed intent interpretation and a supporting text revision is provided to clarify this issue. By linking the words "original code of construction" to the test pressure, it eliminates the potential interpretation that testing is only required when the original code of construction specifically requires testing of replacement parts.
Scope:	Part: Repairs and Alterations; Section: 3; Paragraph: 3.2.2 e)
Background:	NBIC Part 3 Section 3 paragraph 3.2.2 e) (shown below) states that replacement parts shall receive a pressure test as required by the original code of construction. We are concerned that this clause is not being interpreted consistently by all users of the NBIC. The words in question are "…as required by the original code of construction." ASME issued interpretation I-16-1 (shown below) and revised PW-54 to clarify that Section I does not contain requirements for the hydrostatic testing of replacement parts provided for an existing unit. Based on this, the words "… as required by the original code of construction." could be interpreted to mean that pressure testing of the parts is not required because Section I does not require testing of replacement parts. We do not think that was the Committee's intent when clause e) was added to 3.2.2. We submit the proposed intent interpretation and proposed revision for the Committee's consideration to clarify this issue. By linking the words "original code of construction" to the test pressure, it eliminates the potential interpretation that testing is only required when the original code of construction specifically requires testing of replacement parts.
Proposed Revision:	See next page for the proposed revision.

3.2.2 REPLACEMENT PARTS

e) Replacement parts addressed by 3.2.2 c) or d) above shall receive a pressure test at the pressure determined for the completed pressure equipment (boiler, pressure vessel, etc.) in accordance with the original code of construction.~~as required by the original code of construction.~~ If replacement parts have not been pressure tested to this pressure~~as required by the original code of construction~~ prior to installation they may be installed without performing the ~~original code of construction~~ pressure test provided the owner, the Inspector and, when required, the Jurisdiction accept the use of one or a combination of the examination and test methods shown in Part 3, Section 4, paragraph 4.4.1 (for repairs) or 4.4.2 (for alterations). The R Certificate Holder responsible for completing the R Form shall note in the Remarks section of the R Form the examination(s) and test(s) performed, and the reason the replacement part was not tested the pressure determined for the completed pressure equipment in accordance with the original code of construction.

Item 19-82: Request for Revision to NBIC Part 3, 1.5.1 j)

Terrence Hellman
National Board
thellman@nationalboard.org
614-431-3234

Purpose	Safety is not addressed in Part 3. This verbiage could be added to the 1.5.1 j) Method of Performing Work paragraph so Certificate Holders can address the safety concerns specific to their scope of activities.
Scope:	Part: Repairs and Alterations; Section: 1.5.1; Paragraph: 1.5.1 j)
Background:	Safety concerns from confined space issues, to flammable or volatile vessel contents should be addressed in Part 3 to ensure that welders, Inspectors, and other personnel are not put at unnecessary risk during Repair/Alteration activity.
Proposed Revision:	See below for the proposed revision

1.5.1 OUTLINE OF REQUIREMENTS FOR A QUALITY SYSTEM FOR QUALIFICATION FOR THE NATIONAL BOARD "R" *CERTIFICATE OF AUTHORIZATION*

h) Repair and Alteration Methods

The manual shall include controls for repairs and alterations, including mechanical assembly procedures, materials, nondestructive examination methods, pre-heat, and postweld heat treatment, as applicable. Special requirements such as nonmetallic repairs and alterations to graphite and fiber- reinforced thermosetting plastic pressure-retaining items including bonding or mechanical assembly procedures shall be addressed, if applicable.

i) Materials

The manual shall describe the method used to ensure that only acceptable materials (including welding material) are used for repairs and alterations. The manual shall include a description of how existing material is identified and new material is ordered, verified, and identified. The manual shall identify the title of the individual(s) responsible for each function and a brief description of how the function is to be performed.

j) Method of Performing Work

The manual shall describe the methods for performing and documenting repairs and alterations in sufficient detail to permit the Inspector to determine at what stages specific inspections are to be performed. The method of repair or alteration must have prior acceptance of the Inspector. . The manual shall include provisions to ensure safe working conditions during welding, testing, and all activities related to repairs or alterations.

k) Welding, NDE and Heat Treatment

The manual shall describe controls for welding, nondestructive examination (NDE), and heat treatment. The manual is to indicate the title of the individual(s) responsible for the welding procedure specification (WPS) and its qualification, and the qualification of welders and welding

Item 19-91: Request for Revision to NBIC Part 3, 5.6

Purpose	Many "R" Certificate Holders now register R Forms in the National Board Electronic Data Transfer (EDT) System. The EDT system contains all of the required log information listed in paragraph 5.6 of Part 3, which makes it unnecessary and redundant for the "R" Cert. Holder to maintain a separate log.
Scope:	Part: Repairs and Alterations; Section: 5; Paragraph: 5.6
Background:	NBIC Part 3, paragraph 5.6 requires "R" Certificate Holders to maintain a log documenting all Forms registered with the National Board. The information required to be in the log are the the form's unique registration number, description of work performed, date of AIA acceptance, and date the report was submitted to the National Board.
Proposed Revision:	See below for the proposed revision.

5.6 FORM REGISTRATION LOG

“R” or “NR” Certificate Holders shall maintain a log or multiple logs documenting unique and sequentially numbered Form “R” Reports that are registered with the National Board. The logs shall include, as a minimum, each form’s unique registration number, type (R-1, R-2, NR-1, etc.), description of work performed, date of acceptance by the Authorized Inspection Agency, and date the report was submitted to the National Board. As an alternative to the above requirement, the log may be maintained electronically in the National Board Electronic Data Transfer (EDT) System.

NB15-0321
AMR suggested edits
7-16-19

Response to D DeMichael Comments:

3.2.4.5 b) I believe for some devices the pin is contained in an enclosure. Thus the enclosure must be opened to compare the pin markings with nameplate markings. These enclosures contain linkages that move during the activation of the pin device. I'm not familiar with the specific details of the design but do we want to provide inspection guidance for the pin that may expose an individual to a physical hazard while the enclosure cover is removed? Note that Section 3 title states "In-service Inspection" so I would think the inspection guidance would be for when the device is exposed to pressure. The manufacturer's instructions should cover how to inspect without hurting yourself.

3.2.5.2 d) The pin device is not being destructively tested. It's either the pin that is being destructively tested or the device's set pressure is verified using a pressure test. You are destructively testing the pin and testing that the valve components still work properly after being in service. I will delete the word "destructively."

3.2.5.2 e) The activation of the pin device is based on the pressure applied to the piston versus the buckling strength of the pin. Exposure of the piston to 100 psi of water provides the same force as a 100 psi of air so why the media requirement? Will be deleted

3.2.5.3 c) As written the activation test can only be done with the device installed in the service piping and then it will be difficult to perform the leak test since you probably don't have access to the back side of the disk. If you remove a disk device with a non-pretorqued holder from the service piping the leak test and activation test will no longer be accurate. Only a "should"

Having reviewed all of former Part 2, Section 2.5.7, the mandatory parts of the optional in-service test should remain mandatory. The mandates are related to safety and to not altering the relief device set pressure.

Per the expanded scope of this project, edits to Part 4 are suggested that separate out general guidance that applies to the testing of any device, and provide specific guidance (in separate subsections) for testing of relief valves, non-reclosing PRDs with pins or bars, and rupture disks.

3.2.4.4 ~~RUPTURE DISKS~~NON-RECLOSING PRESSURE RELIEF DEVICES

g) 11) For non-reclosing PRDs that use pins or bars, those components should be checked for bends/deflection, cracks, or corrosion. Pin deflection may be the results of pin fasteners being overtightened.

g) 12) For non-reclosing PRDs that use pins or bars, the markings on those components should be checked against information on the device nameplate to ensure that they are installed on the correct device. If markings are illegible or missing, the device should be taken out of service and the pin or bar should be replaced with a component specified by the manufacturer. Replacement shall not be performed while the device is pressurized.

g) 13) For non-reclosing PRDs that use pins or bars, check that there is no foreign object present that could interfere with the bar or pin, prevent proper operation of the device, hold the device shut.

g)14) It is recommended that pins or bars be replaced periodically to prevent unintended failure while in service due to deterioration of the load-bearing component.

3.2.5 GENERAL CONSIDERATIONS FOR TESTING AND OPERATIONAL INSPECTION OF PRESSURE RELIEF DEVICES

a) Pressure relief ~~valves shall be tested periodically to ensure that they are free to operate and will operate~~devices shall be subject to periodic inspection and/or testing based upon the type of device. ~~in accordance with the requirements of the original code of construction. Testing should include device~~

~~set or opening pressure, reclosing pressure, where applicable, and seat leakage evaluation. Tolerances specified for these operating requirements in the original code of construction shall be used to determine the acceptability of test results.~~

b) Testing may be accomplished by the owner on the unit where the valve is installed or at a qualified test facility. In many cases, testing on the unit may be impractical, especially if the service fluid is hazardous or toxic. Testing on the unit may involve the bypassing of operating controls and should only be performed
by qualified individuals under carefully controlled conditions. It is recommended that a written procedure be available to conduct this testing.

1) The Inspector should ensure that calibrated equipment has been used to perform this test and the results should be documented by the owner.

2) If the testing ~~was~~ is performed at a test facility, the record of this test should be reviewed to ensure the ~~valve~~ device meets the requirements of the original code of construction. ~~Valves~~ Devices which have been in toxic,
flammable, or other hazardous services shall be carefully decontaminated before being tested.
In particular, the closed bonnet of valves in these services may contain fluids that are not easily removed or neutralized. If a test cannot be safely performed, the ~~valve~~ device shall be disassembled, cleaned, ~~and~~ decontaminated, repaired, and reset.

3) If a ~~valve~~ device has been removed for testing, the inlet and outlet connections should be checked for blockage by product buildup or corrosion.

3.2.5.1 TESTING AND OPERATIONAL INSPECTION OF PRESSURE RELIEF VALVES

In addition to 3.2.5, the following apply to testing and operational inspection of pressure relief valves.

a) Pressure relief valves shall be tested periodically to ensure that they are free to operate and will operate
in accordance with the requirements of the original code of construction. Testing should include device set or opening pressure, reclosing pressure, where applicable, and seat leakage evaluation. Tolerances specified for these operating requirements in the original code of construction shall be used to determine the acceptability of test results.

b) Valves may be tested using lift assist devices when testing at full pressure may cause damage to the valve being tested, or it is impractical to test at full pressure due to system design considerations. Lift assist devices apply an auxiliary load to the valve spindle or stem, and using the measured inlet pressure, applied load and other valve data allow the set pressure to be calculated. If a lift assist device is used to determine valve set pressure, the conditions of 4.6.3 shall be met. It should be noted that false set pressure readings may be obtained for valves which are leaking excessively or otherwise damaged.

~~c~~c) If valves are not tested on the system using the system fluid, the following test mediums shall be used:

1) High pressure boiler pressure relief valves, high temperature hot-water boiler pressure relief valves, low pressure steam heating boilers: steam;
2) Hot-water heating boiler pressure relief valves: steam, air, or water;
3) Hot water heater temperature and pressure relief valves: air or water;
4) Air and gas service process pressure relief valves: air, nitrogen, or other suitable gas;
5) Liquid service process pressure relief valves: water or other suitable fluid;
6) Process steam service pressure relief valves: steam or air with manufacturer's steam to air correction factor.

Note: Valves being tested after a repair must be tested on steam except as permitted by 4.6.2.

~~e~~d) As an alternative to a pressure test, the valve may be checked by the owner for freedom of operation by activating the test or "try" lever (manual check). For high pressure boiler and process valves, this test should be performed only at a pressure greater than 75% of the stamped set pressure of the valve or the lifting device may be damaged. This test will only indicate that the valve is free to operate and does not provide any information on the actual set pressure. All manual checks should be performed with some pressure under the valve in order to flush out debris from the seat that could cause leakage.

Note: The manual check at 75% or higher is based on lift lever design requirements for ASME Section I and VIII valves. Code design requirements for lifting levers for Section IV valves require that the valve be

capable of being lifted without pressure.

~~f~~e) Systems with multiple valves will require the lower set valves to be held closed to permit the higher set valves to be tested. A test clamp or “gag” should be used for this purpose. The spring compression screw shall not be tightened. It is recommended that the test clamps be applied in accordance with the valve manufacturer’s instructions when the valve is at or near the test temperature, and be applied hand tight only to avoid damage to the valve stem or spindle.

~~g~~f) Upon completion of set pressure testing, all pressure relief valve gags shall be removed. Any stop valves used to isolate lower set pressure relief devices shall be reopened (and locked, if applicable).

3.2.5.2 TESTING AND OPERATIONAL INSPECTION OF NON-RECLOSING PRESSURE RELIEF DEVICES WITH PINS OR BARS

In addition to 3.2.5, the following apply to testing and operational inspection of non-reclosing PRDs with pins or bars.

a) Periodic set point testing is not required since pins or bars are single use.

b) Periodic inspection shall be per 3.2.4.4.

c) Non-reclosing PRDs shall be periodically inspected by the owner for freedom of motion. Freedom of motion inspection frequency shall be per 3.2.6.

1) Remove pressure from the PRD, or remove the PRD from service, prior to performing this check.

2) Remove the pin or bar.

3) Manually exercise the sealing mechanism to ensure it is capable of its full range of motion.

4) Reinstall the pin or bar or replace with new. Replacement pin or bar shall be per manufacturer recommendation.

5) Restore pressure to the PRD.

6) The PRD should be checked for seat leakage following restoration of pressure.

d) The owner may elect to have a non-reclosing PRD tested periodically in order to determine service life of the device. Such tests should ensure that the PRD is free to operate and will operate in accordance with the requirements of the original code of construction. Testing should include device set or opening pressure and seat leakage evaluation. Tolerances specified for these operating requirements in the original code of construction should be used to determine the acceptability of test results.

3.2.5.3 TESTING AND OPERATIONAL INSPECTION OF RUPTURE DISKS

In addition to 3.2.5, the following apply to testing and operational inspection of rupture disks.

a) Periodic testing of rupture disks is not required

b) Rupture disks shall be subject to periodic inspection per 3.2.4.4.

c) The owner may elect to have a rupture disks tested periodically in order to determine service life. Such tests should ensure that the disk is free to operate inside its holder and will operate in accordance with the requirements of the original code of construction. Testing should include an evaluation of leakage through the disk (e.g. due to cracks or porosity), followed by device opening or burst pressure at rated temperature. Tolerances specified for these operating requirements in the original code of construction should be used to determine the acceptability of test results.

d) If PRDs are not tested on the system using the system fluid, the following test mediums shall be used:

1) Air and gas service PRDs: air, nitrogen, or other suitable gas;

2) Liquid service PRDs: water or other suitable fluid.

3.2.5.~~1~~ 4 CORRECTIVE ACTION

a) If a ~~valve~~ pressure relief valve or a non-reclosing PRD that is actuated by a pin or bar is found to be stuck closed, the system should immediately be taken out of service until the condition

can be corrected, unless special provisions have been made to operate on a temporary basis (such as additional relief capacity provided by another valve.) The owner shall be notified and corrective action such
as repairing or replacing the inoperable ~~valve~~ device shall be taken.
b) If a pressure relief device leaks, the owner shall be notified and decide what corrective action (if any) will be taken.

NB15-0324 Testing, storage, and shelf life guidelines
7-16-19

Updated to respond to comments from failed ballot

BEGIN PROPOSED CHANGE
New glossary entry

Pressure Relief Valve Shelf Life – For a pressure relief valve or pilot valve, the length of time for which the device can be stored, after it has been set and tested or repaired, prior to installation, without requiring a retest or reduced service interval.

New supplement

SUPPLEMENT S8
PRESSURE RELIEF AND PILOT VALVE STORAGE & SHELF LIFE

S8.1 SCOPE

This supplement provides guidance for proper conditions and duration of pressure relief valve storage. This guidance applies to pressure relief valves, temperature & pressure relief valves, and pilot operated pressure relief valves (including the main body valve and the pilot valve).

~~4.2.2.1~~S8.2 PRESSURE RELIEF VALVE STORAGE ~~& SHELF LIFE~~

Pressure relief valve set pressure and/or seat tightness can deviate during storage. The manufacturer's recommendations ~~shall~~ should be followed regarding shelf life. In some cases, it may be necessary to retest the relief valve prior to installation or reduce maintenance interval if the relief valve was in storage for an extended period. When storing relief valves, a first in / first out policy should be followed.

~~4.2.2.1.1~~S8.3 PRESSURE RELIEF VALVE STORAGE CONDITIONS
Relief valves ~~shall~~ should be stored per manufacturer recommendations. Where the manufacturer has no recommendations, the following guidelines should be followed.

a) Storage temperature should be between 40 and 72 °F, where practical. Minimum storage temperature should not be below the minimum operating temperature. Maximum storage temperature should not exceed the lesser of the maximum operating temperature or 125 °F.
b) Ideal relative humidity in the storage area should be 70 percent or less. For relief valves with soft seats, relative humidity should be kept between 30 and 70 percent. Some soft materials require a minimum humidity level to prevent material degradation.
c) Storage area should have a non-corrosive atmosphere. Otherwise, stored relief valves should be protected from the atmosphere.
d) Relief valves that utilize spindles or weights should be stored in a vertical position.
e) Temperature and pressure relief valves should have their probes supported to prevent bending or detachment.
f) All ports should be plugged, blanked, or capped.
g) Relief valves that have been cleaned for oxidizing gas or other specialty service should be sealed in a plastic bag. Plastic wrapping may be acceptable for larger relief valves.

h) Storage should be off the ground (e.g. on a shelf or pallet).
i) Storage area should limit exposure to direct sunlight
j) Relief valves constructed of materials subject to corrosion (such as carbon steel) should be painted or otherwise protected against the environment prior to storage.

~~4.2.2.1.2~~S8.4 PRESSURE RELIEF VALVE SHELF LIFE

Pressure Relief valve shelf life shall be determined based upon manufacturer's recommendations and performance history. Shelf life may increase or decrease based upon storage conditions and performance history. ~~If shelf life is exceeded, the valve shall either be tested prior to installation or tested using its lift lever (if applicable) following installation. Storage for a length of time less than the shelf life of the pressure relief valve does not reduce the time before the first regularly scheduled retest. Where the manufacturer has no~~In the absence of manufacturer or service provider recommendations, and performance history, the shelf life recommendations ~~in~~ per table ~~4.2.2.1.2~~S8.4 should be used when stored in accordance with S8.3. Shelf life may be increased or decreased, from the recommended values, ~~based upon~~once performance history is established. ~~and/or warranty periods offered by the manufacturer or service provider.~~

TABLE S8.4 RECOMMENDED RELIEF VALVE SHELF LIFE (IF NOT PROVIDED BY MANUFACTURER)

Pressure Relief Valve Description	Recommended Shelf Life (years)
Pressure relief valve with metal-to-metal seat	5
Pressure relief valve with nonmetal seat	~~5~~2
Temperature and pressure (T&P) relief valve	2

S8.4.1 EXCEEDING SHELF LIFE

If shelf life is exceeded, the valve shall either be tested prior to installation or tested using its lift lever (if applicable) following installation. Storage for a length of time less than the shelf life of the pressure relief valve does not reduce the time before the first regularly scheduled retest. If performance history shows that time in storage less than shelf life causes the device to function outside of acceptable tolerance, then the shelf life shall be reduced.

END OF PROPOSED CHANGE

Research/Technical Justifications for
NB15-0324 - Create Guidelines for Inspection and Testing Frequencies with respect to shelf life and storage of pressure relief valves.

Note: PRVs with metal-to-metal seats with or without o-ring body seals typically have longer shelf life. Much of the deviation in set point that occurs over time in a PRV is due to compression and creep in the soft seat. This means having o-ring body seals won't impact the shelf life of your metal-seated valve. This note does not apply to valves with o-ring seats. The guidance for soft seats would also apply to o-ring seats.

RegO: Per phone conversation with Fay, shelf life is 10 years without set pressure deviating from tolerance. There is no effect on service life or maintenance schedule if installed before expiration of shelf life. Time after shelf life would be included in maintenance schedule. This means, if you have a 5

year test frequency for your relief valve, and it sits on the shelf for 11 years, your first retest would take place 5 +(11-10) = 4 years after installation, instead of 5 years.

Generant: Per phone conversation with Dino V. D'Onofrio, shelf life is 5 years without set pressure deviating from tolerance. There is no effect on service life or maintenance schedule if installed before expiration of shelf life. Time after shelf life would be included in maintenance schedule. Generant will try to perform some sanity check tests on old inventory ~~before the January meeting. (Waiting for response)~~See results below.

GENERANT Valves & BI-Lok Fittings

Evaluation Testing Form

	Part Number
Valve 1	CRVP3-250B-K-600
Valve 2	CRVP3-500B-K-232
Valve 3	CRV-500B-K-375

Notes:

Valve 1: K11 = November 2011
Valve 2: K12 = November 2012
Valve 3: A14 = January 2014

Evaluation Date:	1/8/2016
Quantity:	3
Testing Media:	Nitrogen
Tested by:	Tim Knapp
Transducer #:	TR-09

Relief Valves			Test 1 (Initial Crack)			Test 2 (After Initial Crack)			
Valve #	DATE CODE	Nom.	First Bubble	Full Flow	Reseat	First Bubble	Full Flow	Reseat	Testing Notes
1	K11	600	603	607	566	604	607	580	4 years, 2 months
2	K12	232	233	237	212	239	239	227	3 years, 2 months
3	A14	375	389	389	352	384	384	358	2 years

Mueller: Hot water tank relief valves have 2 year shelf life

http://muellerrefrigeration.com/technical/frequently-asked-questions

What is the shelf life of a Mueller Relief Valve?

2 years.

My relief valve discharged "popped" and the setting of the valve seems to be lower!

All Relief Valves must be replaced after they pop. When a Relief Valve pops, debris can get trapped in the seal and the spring can either rotate or take what is called a "set" which can potentially relax the spring and lower the set pressure. Because of this, relief valves must be replaced in order to function properly.

FlowSafe: Per phone conversation and follow-up email from Cindi Zaragoza, shelf life is 1 year without set pressure deviating from tolerance. After that, they recommend lifting the relief valve prior to installing it.

Herose: per email valves have 10 year shelf life without set pressure change.

Anderson Greenwood: (waiting for response)

Watts: Per phone conversation, hot water tank relief valves have indefinite shelf life, but must be tested annually after installation. Hot water tank relief valves are tested immediately after initial start-up of the heater. Thus, time spent on shelf would not impact test frequency anyways. Warranty expires 1 year from date of purchase. So it would be wise not to store relief valve for more than 1 year. **Table above has a 2 year reccomendation?**

ANNUAL OPERATION OF T&P RELIEF VALVES:

WARNING: Following installation, the valve lever MUST be operated AT LEAST ONCE A YEAR by the water heater owner to ensure that waterways are clear. Certain naturally occurring mineral deposits may adhere to the valve, blocking waterways, rendering it inoperative. When the lever is operated, hot water will discharge if the waterways are clear. PRECAUTIONS MUST BE TAKEN TO AVOID PERSONAL INJURY FROM CONTACT WITH HOT WATER AND TO AVOID PROPERTY DAMAGE. Before operating lever, check to see that a discharge line is connected to this valve, directing the flow of hot water from the valve to a proper place of disposal. If no water flows when the lever is operated, replacement of the valve is required. TURN THE WATER HEATER "OFF" (see your water heater instruction manual) AND CALL A PLUMBER IMMEDIATELY.

REINSPECTION OF T&P RELIEF VALVES:

WARNING: Temperature and Pressure Relief Valves should be inspected AT LEAST ONCE EVERY THREE YEARS, and replaced, if necessary, by a licensed plumbing contractor or qualified service technician, to ensure that the product has not been affected by corrosive water conditions and to ensure that the valve and discharge line have not been altered or tampered with illegally. Certain naturally occurring conditions may corrode the valve or its components over time, rendering the valve inoperative. Such conditions can only be detected if the valve and its components are physically removed and inspected. Do not attempt to conduct an inspection on your own. Contact your plumbing contractor for a reinspection to assure continuing safety. FAILURE TO REINSPECT THIS VALVE AS DIRECTED COULD RESULT IN UNSAFE TEMPERATURE OR PRESSURE BUILD-UP WHICH CAN RESULT IN SERIOUS INJURY OR DEATH AND/OR SEVERE PROPERTY DAMAGE.

2.3 STORAGE AND HANDLING

A. STORAGE

Prior to installation, Flow Safe pressure relief valve assemblies and parts should be stored in a clean, dry environment if possible. Inlet and outlet connections should remain covered until the item is ready for installation.

For outside storage, protection from the elements is recommended particularly if plugs and flange covers are not weather-tight. Exposed carbon steel surfaces should remain coated with a suitable rust inhibitor until the assembly is ready for installation.

Even though elastomers and lubricants in the relief valve typically have a long shelf life and can be used in environments down to -40 °F/°C, operability of the main piston should be checked before placing the valve in service after extended storage. See Section 2.4.

2.4 INSTALLATION

Prior to installation, check that the set pressure on the nameplate is as required, and meets the system requirements. Lifting and handling should follow the instructions in Section 2.3.

If the valve has been in storage for a significant length of time, verify that the main piston can still freely move by pushing on it manually through the valve inlet. If it does not return to the closed position, it may be necessary to seat the piston using a pressure source connected to the field test, pilot, or main valve cap.

Herose's statement of shelf life:

- Storage temperature between +5°C (278°K) and +20°C (293°K)
- relative humidity should be bellow 70%
- not expose to direct sunlight

Ideally the safety valves remains in their original HEROSE packaging.
The max. period of storage is dependend from the used sealing material (see table).

Soft seal	Shelf life
PTFE (Teflon)	10 years
PTFE /25% Kohle	10 years
PCTFE	10 years
NBR	5 years
FPM (Viton)	10 years
EPDM	5 years
Vullkolan	4 years

From: "Little, Junior R" <jlittle@eastman.com>
To: "Adam_Renaldo@praxair.com" <Adam_Renaldo@praxair.com>
Date: 12/19/2017 01:03 PM
Subject: RE: [I] NB-15-0324 0 PRV shelf life

Adam here is some information for shelf life from Leser. I think I have sent this to you but wanted to make sure.

Regarding shelf life of the valves, depending on the valve seat and size, and also as to how they store them?

O-ring valves, if stored properly and not in a bad environment they should be good for 4 plus years as well metal seats depending on the humidity. We would recommend verification of set before installation

Responses to Survey sent out by Alton Cox

PRV Shelf Life and Pre-Test Prior to Installation Requirements Survey 2018

Background:

This Question was sent to me by an Owner/User VR Holder. I forwarded it to 27 Owner/Users with whom I have an established relationship. 10 Sent Responses. Below are the Responses.

Questioner's Comment:

NBIC for Section VIII PRVs (UV) and ASME OM code (IST applications) pre-testing Pressure Relief Valves is acceptable, but no timeframe is provided between the date of the test and date of installation.

Question 1: ***If you receive a PRV with documented test results from the Vendor (Manufacturer, Assembler or VR Shop), do typically install the PRV directly in the system and use the Vendor Test Documentation as confirmation of PRV Set pressure and Seat Tightness?***

Responder #1: We do; users are allowed to install out of the box provided the PRV is tagged with the installed date within reason of when purchased.

Responder #2: No, we have always tested new PRV's, regardless of vendor test results.

Responder #3: We test all valves for set point and seat leakage prior to install. The exception to this is very large valves that are removed, shipped to vendor for refurb and testing then shipped back and installed. If we had the ability we would test those too.

Responder #4: Yes we do. We usually install RV in a couple days of it being returned to us from a VR SHOP

Responder #5: Depends on how long it sits in our storeroom or shop prior to installation. While we have no specific timing, if we don't install for a month or more after receipt, we'll do a pre-test. We got burned on a new PRV that had a very long, vertical tail pipe. The PRV leaked until material (hot oil) filled the tail pipe and over flowed.

Responder #6: Yes.

Responder #7: Yes.

Responder #8: Since we are an on-site Owner/User VR shop, we test every valve coming directly from vendors and our storeroom to confirm set pressure, seat tightness and functionality, before it is installed. We send valves that we do not have the capabilities of testing to an outside VR shop for testing, and review their repair records for code conformity, and rely on their assessment of set pressure, seat tightness and functionality. That being said, in performing these "PRE-TESTS", we have found valves with set pressure, seat tightness or functionality nonconformity issues, which required working with Manufacturers, Vendors and VR Repair Shops to address and resolve the non-conformities.

PRV Shelf Life and Pre-Test Prior to Installation Requirements Survey 2018
Responder #9: We look at the valve to see if there has been any shipping damage to the valve and container. If all looks good, AND there is a test certificate with the valve, then we do install into the system without testing. Depending on the type of valve, if there is no test certificate, then we test. (small pull ring type do not usually get tested prior to installation.)
Responder # 10: You have to watch this one because the Section I (V) PSVs because of the time line of testing , shelf and re-install could be about 14 months. Per Our Corporate standard
==========

Question 2: *If so, how long is the Shelf Life of the PRV?*

Responder #1: 3 years is allowed.
Responder #2: Up to ~3 months, but we do not have a documented in-house requirement for shelf life. We always retest the valve before putting it in service, but if it has been less than a few months since WE (in-house) tested the valve, we may put it in service without retesting.
Responder #3: We find a high percentage of valves fail set point and/or leakage even when set and certified from the manufacture or an independent company.
Responder #4: Now we enter a different game. Valves ordered by ENG. for a project etc. can have some shelf life. My personal opinion – 6 mo. or less install , 6 mo. or more perform Test Only and RESET the Start Date. (for our PM's) Primarily basing this off our 3 year interval.
Responder #5: The shelf life is not the big concern to me as long the opening are covered and it is stored properly. My issue is with the improper storing and handling (banging, bumping, jostling etc.
Responder #6: Variable – we don't formally track or record the received-on date prior to valve installation.
Responder #7: Varies…typically ranges from 12 to 36 months.
Responder #8: Since we confirm set pressure and seat tightness on all PRV's before they are installed, we do not consider this a concern.
Responder #9: Most soft goods have a shelf life of at least 10 years (o-rings, gaskets, diaphragms, soft seats). Our maximum maintenance cycle is 4 years, so the valve could be on the shelf for 4 years, then installed for 4 years, leaving 2 years 'safety factor'. The soft items will be inspected to determine if they can last another maintenance cycle, and if in doubt are changed out.
PRV Shelf Life and Pre-Test Prior to Installation Requirements Survey 2018
Responder #10: I'm glad you are bringing this up because my failure rate of 'NEW" next day out of the box across the industry is about 95%. If I was using the vendor's test documentation all the time I wouldn't even know there was an issue. The shelf life time line doesn't change anything because they fail out the box the next day and/or new sitting on the shelf for a year. I've been raising the same issue to our lead PRD person because they don't realize how bad it is and they're trusting the vendor doc as being accurate. When I test valves after they come from another VR shop, next day and/or that's been sitting on a shelf for any length of time the failure rate is about 10%.
==========

Question 3: ***Does the "Shelf Life" Time Frame have any technical merit?***

Responder #1: Users are moving slowly to have ready to install spares.

Responder #2: We take the testing/inspection due date to be from the time it was last tested/inspected, not the installation date. We replace our ammonia valves every five years, and only perform a visual inspection of the valve installed in the field during that time; for these valves, we order NEW valves within a couple of months of when they're due to be replaced, and presumably these valves that we receive have been on the shelf for less than 6 months, but we don't have a documented requirement for shelf life.

Responder #3: Based on this we do not track shelf life unless there is an elastomer in the component.

Responder #4: Now we enter another game. With our new RBI* program, cough cough. Intervals going to 10 years – big whoop if it sat for 3 years – have 7 years left before due. This hasn't been practiced though (yet) – RBI Program is in its infancy at this time.

***NOTE:** Risk-based inspection. Risk Based Inspection (**RBI**) is an Optimal **maintenance** business process used to examine equipment such as pressure vessels, heat exchangers and piping in industrial plants.

Responder #5: Again, depends on storage set up. I think if properly stored, shelf life is not issue. I would be interested in hearing some of the other responses though. We have several PRV's that may sit on the shelf up to 5 years.

Responder #6: I can see the merit in tracking the shelf life and re-testing valves after a period of time. For properly stored valves, I would expect the "period of time" would be on the order of 5 to 7 years.

Responder #7: No - Spare valves stay on the shelf until the scheduled inspection date for the inservice
valve.

PRV Shelf Life and Pre-Test Prior to Installation Requirements Survey 2018

Responder #8: Since we are an Owner/User VR shop, Our Storerooms are controlled, and we "Pre-Test" all PRV's before installation, we do not feel that shelf life has any technical merit.

Responder # 9: Yes, it should be considered, especially for o-rings, diaphragms, and soft seats that are stored as spare parts.

Responder #10: NO RESPONSE GIVEN

NB-15-0805 ~~AMR~~ AMR edits ~~7-21~~1-22-18~~-16~~

Update language about pipe material able to handle temperature requirements, in line with IMC.

~~Note that this is already covered in 5.2. So we will be somewhat beating a dead horse~~

~~**5.2 GENERAL REQUIREMENTS**~~
~~For piping, the basic considerations are: the design temperature, the pressure retained by the pipe, the fluid~~
~~in the pipe, the load resulting from the thermal expansion or contraction, and impact or shock loads imparted~~
~~(such as water hammer, external loads, wind loads and vibration from equipment).~~

Proposed Edits (Note that we intentionally are not adding this to power boilers. Power boilers are getting their own supplement that will include PRV piping requirements specific to power boilers):

Part 1, 3.9.1.5 PRESSURE RELIEF VALVE DISCHARGE PIPING

~~i~~c) ~~The design~~ Discharge piping shall be rated for the discharge fluid conditions of pressure and temperature including a minimum and maximum design temperature. Material selection for the discharge piping shall consider the reduction in material toughness at the low end of design temperature and the reduction in material strength at the high end of design temperature[DDB1][RA2]. Rigid pipe or tubing ~~shall~~should be used for discharge lines that carry hot water or steam.

~~k)~~
~~lreduction in mechanical strength (e.g.threads/flanges/components), bonding strength of joints, exposure to discharge media,~~d) Plastic discharge pipe and fittings are permitted (when compatible with the process fluid, system design temperatures, and other ambient conditions such as light and humidity) and shall conform to NSF/ANSI 14 Plastics Piping System Components and Related Materials.[DDB3][RA4]
~~m~~
e~~n~~) Discharge piping shall be rated for any static pressure present and the back pressure that may develop when the pressure relief device is at full capacity[DDB5][RA6]. Where multiple pressure relief devices or vents discharge into common piping, the back pressure that could develop due to simultaneous flow from all sources shall be considered.

Repeat the same addition to the following paragraphs (note that the letters change)

Part 1, 3.9.4.7 TEMPERATURE AND PRESSURE RELIEF VALVE DISCHARGE PIPING
~~i The design Material selection for the~~

~~k) lreduction in mechanical strength (e.g.threads/flanges/components), bonding strength of joints, exposure to discharge media,mn designcapacitycommond)~~
e)
f)

Part 4, 2.4.1.5 PRESSURE RELIEF VALVE DISCHARGE PIPING
c)
d)

e)

Part 4, 2.4.4.7 TEMPERATURE AND PRESSURE RELIEF VALVE DISCHARGE PIPING

c)
d)
e)

~~i) The design~~ ~~Material selection for the~~

~~k) lreduction in mechanical strength (e.g.threads/flanges/components), bonding strength of joints, exposure to discharge media,mn designcapacitycommon~~ j)
k)
l)

Item #NB 18-73 Rev 7/22/19

Proposal:

PART 4

2.3 OVER PRESSURE PROTECTION FOR THERMAL FLUID HEATERS

2.3.1 GENERAL

Thermal fluid heaters shall be provided with overpressure protection in accordance with the code of construction.

2.3.2 PRESSURE RELIEF ~~DEVICES~~ VALVES

Thermal fluid heaters shall be equipped with one or more pressure relief ~~devices~~ valves unless the option for overpressure protection by system design is utilized (when permitted by the original code of construction).

When pressure relief ~~devices~~ valves are used, the following shall apply:

a) Pressure relief valve(s) shall be of a totally enclosed type. ~~A body drain is not required~~

~~b) Rupture disks may be installed upstream or downstream of the pressure relief valve(s) in accordance with the original code of construction.~~

b) A lifting lever shall not be used in Pressure relief valve(s). A body drain is not required.

c) Pressure relief valves ~~and rupture disks~~ shall be in accordance with the code of construction and designed for liquid, vapor, or combination service as required for the specific installation, service fluids, and overpressure conditions.

d) Cast iron fittings shall not be used.

e) Copper and copper alloys shall not be used.

f) The inlet connection to the valve shall be not less than NPS ½ (DN 15).

2.3.3 LOCATION

a) Pressure relief ~~devices~~ valves shall be connected to the heater in accordance with the original code of construction.

2.3.4 CAPACITY

a) The pressure relief ~~device(s)~~ valves shall have sufficient capacity to prevent the pressure vessel from exceeding the maximum pressure specified in the vessel code of construction.

2.3.5 SET PRESSURE

a) When a single relief ~~device~~ valve is used, the set pressure marked on the ~~device~~ valve shall not exceed the maximum allowable working pressure.

b) When more than one pressure relief ~~device~~ valve is provided to obtain the required capacity, only one pressure relief ~~device~~ valve set pressure needs to be set at or below the maximum allowable working pressure. The set pressure of the additional relief ~~devices~~ valves shall be such that the pressure cannot exceed the maximum pressure permitted by the code of construction.

2.3.6 INSTALLATION

Pressure relief valves and the associated discharge piping shall be installed in accordance with the heater Manufacturer's recommendations. The installation of the pressure relief valves required for Thermal Fluid Heaters shall include but not be limited to following requirements.

a) The pressure relief valve shall be provided with discharge piping. ~~When a discharge pipe is used,~~ The cross-sectional area of discharge piping shall not be less than the full area of the valve outlet. The size of the discharge lines shall be such that any pressure that may exist or develop will not reduce the relieving capacity or adversely affect the operation of the attached pressure vessel relief ~~devices~~ valves. Discharge piping shall be as short and straight as possible and arranged to avoid undue stress on the pressure relief

~~device~~ valve.

b) The pressure relief valve or valves shall be connected to the pressure vessel independent of any other connection, and shall be attached as close as possible without any unnecessary intervening pipe or fitting.

c) The cross sectional area of the piping between the heater and the relief ~~device~~ valve shall be sized either to avoid restricting the flow to the pressure relief ~~devices~~ valves or made at least equal to the inlet area of the pressure relief ~~devices~~ valves connected to it.

d) When two or more required pressure relief ~~devices~~ valves are placed on one connection, the inlet cross-sectional area of this connection shall be sized either to avoid restricting the flow to the pressure relief ~~devices~~ valves or made at least equal to the combined inlet areas of the pressure relief ~~devices~~ valves connected to it.

e) Unless permitted by the code of construction, there shall be no intervening stop valve between the vessel and its pressure relief ~~device(s)~~ valves, or between the pressure relief ~~device~~ valve and the point of discharge.

f) Pressure relief ~~device~~ valve discharges shall be arranged such that they are not a hazard to personnel or other equipment and, when necessary, lead to a safe location, such as a catchment tank, for the disposal of fluids being relieved.

g) The pressure relief discharge ~~should~~ shall be connected to a closed, vented storage tank or blowdown tank with solid piping (no drip pan elbow~~,~~ or other air gap).

When outdoor discharge is used, the following ~~should~~ shall be considered for discharge piping hazards.

At the point of discharge:

1) Both thermal and chemical reactions (personnel hazard)

2) Combustible materials (fire hazard)

3) Surface drains (pollution and fire hazard)

4) ~~Loop seal or~~ Rain cap on the discharge ~~(keep both air and water out of the system)~~, if installed the opening cross sectional area shall be equal to or greater than the discharge piping.

Along the discharge piping:

5) Drip leg near device and anywhere ~~into loop~~ along the discharge line ~~point~~ (prevent liquid collection)

6) Heat tracing for systems using high freeze point fluids (prevent blockage)

h) Discharge lines from pressure relief ~~devices~~ valves shall be designed to facilitate drainage or be fitted with low point or valve body drains to prevent liquid from collecting in the discharge side of a pressure relief ~~device~~ valve. Drain piping shall discharge to a safe location for the disposal of the fluids being relieved. The possibility of solidification of fluid leakage into the discharge piping system shall be considered.

~~h) A suitable condenser that will condense all the vapors discharged from the pressure relief valve may be used in lieu of piping the vapors to the atmosphere.~~

~~i) In order to minimize the loss by leakage of material through the pressure relief valve, a rupture disk may be installed between the pressure relief valve and the vaporizer, provided the following requirements are met:~~

~~1). The cross-sectional area of the connection to a vaporizer shall be not less than the required relief area of the rupture disk.~~

~~2) The maximum pressure of the range for which the disk is designed to rupture shall not exceed the opening pressure for which the pressure relief valve is set or the maximum allowable working pressure of the vessel.~~

~~3) The opening provided through the rupture disk, after breakage, shall be sufficient to permit a flow equal to the capacity of the attached valve, and there is no chance of interference with the proper functioning of the valve, but in no case shall this area be less than the inlet area of the valve.~~

~~4) The space between a rupture disk and the valve shall be provided with a pressure gage, try cock, free vent, or a suitable telltale indicator. This arrangement permits the detection of disk rupture or leakage.~~

i) Pressure relief valve discharge capacity for liquid service shall be determined from the following equation:

For Liquid
U.S. Customary Units
$W = 2{,}407KA \sqrt{(P - Pd)w}$

SI Units
$W =$ ~~5092~~ $5.092\ KA \sqrt{(P - Pd)w}$

Where.
W = Liquid Capacity in lb/hr (kg/hr).
A = Discharge Area of Pressure relief Valve, in² (mm²)
K = coefficient of discharge for valve design
P = (Set pressure + OP + Atmosphere pressure, psia (Mpa)
OP = Overpressure required for Pressure Relief Valve to reach capacity specified in code of construction
Pd = Pressure at discharge of valve, psia (Mpa)
w = Specific ~~liquid~~ weight of liquid at inlet condition lb/ft³ (kg/m³)

To convert lb/hr of water to gal/min, multiply the capacity in lb/hr by 1/500.

!!!!!!! (SEE PART 1 PROPOSAL ON NEXT PAGE) !!!!!!!

PROPOSAL:

Part 1 SUPPLEMENT 5

S5.7.6 INSTALLATION

Pressure relief valves and the associated discharge piping shall be installed in accordance with the heater Manufacturer's recommendations. The installation of the pressure relief valves required for Thermal Fluid Heaters shall include but not be limited to following requirements.

a) The pressure relief valve shall be provided with discharge piping. ~~When a discharge pipe is used,~~ The cross-sectional area of discharge piping shall not be less than the full area of the valve outlet. The size of the discharge lines shall be such that any pressure that may exist or develop will not reduce the relieving capacity or adversely affect the operation of the attached pressure vessel relief ~~devices~~ valves. Discharge piping shall be as short and straight as possible and arranged to avoid undue stress on the pressure relief ~~device~~ valve.

b) The pressure relief valve or valves shall be connected to the pressure vessel independent of any other connection, and shall be attached as close as possible without any unnecessary intervening pipe or fitting.

c) The cross sectional area of the piping between the heater and the relief ~~device~~ valve shall be sized either to avoid restricting the flow to the pressure relief ~~devices~~ valves or made at least equal to the inlet area of the pressure relief ~~devices~~ valves connected to it.

d) When two or more required pressure relief ~~devices~~ valves are placed on one connection, the inlet cross-sectional area of this connection shall be sized either to avoid restricting the flow to the pressure relief ~~devices~~ valves or made at least equal to the combined inlet areas of the pressure relief ~~devices~~ valves connected to it.

e) Unless permitted by the code of construction, there shall be no intervening stop valve between the vessel and its pressure relief ~~device(s)~~ valves, or between the pressure relief ~~device~~ valve and the point of discharge.

f) Pressure relief ~~device~~ valve discharges shall be arranged such that they are not a hazard to personnel or other equipment and, when necessary, lead to a safe location, such as a catchment tank, for the disposal of fluids being relieved.

g) The pressure relief valve discharge shall be connected to a closed, vented storage tank or blowdown tank with solid piping (no drip pan elbow or other air gap).

When outdoor discharge is used, the following shall be considered for discharge piping hazards.

At the point of discharge:

1) Both thermal and chemical reactions (personnel hazard).

2) Combustible materials (fire hazard)

3) Surface drains (pollution and fire hazard)

4) Rain cap on the discharge, if installed the opening cross sectional area shall be equal to or greater than the discharge piping.

Along discharge piping:

5) Drip leg near device and anywhere along the discharge line (prevent liquid collection)

6) Heat tracing for systems using high freeze point fluids (prevent blockage)

h) Discharge lines from pressure relief valves shall be designed to facilitate drainage or be fitted with low point or valve body drains to prevent liquid from collecting in the discharge side of a pressure relief valve. Drain piping shall discharge to a safe location for the disposal of the fluids being relieved. The possibility of solidification of fluid leakage into the discharge piping system shall be considered.

ITEM 18-80 Proposal 9-30-19

PART 4

SUPPLEMENT 4
RECOMMENDED PROCEDURES FOR REPAIRING PRESSURE RELIEF VALVES
S4.1 ~~INTRODUCTION~~SCOPE

This supplement contains recommended procedures for the repair, packaging, shipping and transportation of pressure relief valves. S4.2 contains recommended procedures for the repair of spring-loaded pressure relief valves.~~, and~~ S4.3
contains recommended procedures for the repair of pilot operated types of pressure relief valves. S4.4 contains ~~I~~information
on packaging, shipping and transportation. ~~is included as S4.5.~~

~~a)~~ It is essential that the repair organization establish basic, specific procedures for the repair of pressure relief valves. The purpose of these recommended procedures is to provide the repair organization with guidelines for this important aspect of valve repair. It is realized that there are many types of valves and conditions under which they are repaired and, for this reason, the specific items in these recommended procedures may not apply, or they may be inadequate for each of those types or to the detailed repairs that may be required for each valve.

~~b) S4.2 contains recommended procedures for the repair of spring-loaded pressure relief valves, and S4.3~~
~~contains recommended procedures for the repair of pilot operated types of pressure relief valves. Information~~
~~on packaging, shipping and transportation is included as S4.5.~~

S4.2 SPRING-LOADED PRESSURE RELIEF VALVES

Prior to removal of a valve from a system for a repair or any disassembly, ensure that all sources of pressure
have been removed from the valve.

a) Visual inspection as received

1) This information is to be recorded:

a. Record user (customer) identification number;

b. Complete original PRV nameplate data, previous repair nameplate data, plus any important information received from customer;

c. Check external adjustment seals for warranty repair;

d. Check bonnet for venting on bellows type valves; and

e. Check appearance for any unusual damage, missing, or misapplied parts.

2) If sufficient damage or other unusual conditions are detected that may pose a safety risk during preliminary testing, then proceed directly to S4.2 c)

3) Valves that are to be repaired in place proceed to S4.2 c) unless preliminary testing has been authorized
by the owner.

b) Preliminary test as received

1) Information from the recommended preliminary performance test and subsequent disassembly and inspections will provide a basis for any repair interval change that should be necessary to ensure that the valve will function as intended.

2) Determine set pressure or Cold Differential Test Pressure (CDTP) in accordance with manufacturer's recommendations and appropriate ASME Code Section. Do not allow test pressure to exceed 116% of set pressure unless otherwise specified by the owner. A minimum of three tests is usually required to obtain consistent results.

3) If results do not correlate with field performance, then steps to duplicate field conditions (fluid and temperature) may be necessary.

4) Record preliminary test results and test bench identification data.

c) Disassembly

1) Remove cap and lever assembly, if applicable.
2) Remove release nut assembly, if applicable.
3) Loosen jam nut on adjusting (compression) screw.
4) Record measurement and remove adjusting (compression) screw.
5) Remove bonnet or yoke.
6) Remove spring and washers, and tag (identify) including upper and lower washers, as appropriate.
7) Remove spindle and disk assembly.
8) Remove ring pins.
9) Record measurement and remove adjusting rings, nozzle, and guide, as applicable.
d) Cleaning
1) Wire all small parts together and clean. (Caution: do not use a cleaning method that will damage the parts.)
2) Do not clean in a chemical solution except under acceptable circumstances.
3) Protect seating surfaces and nameplates prior to cleaning.
e) Inspection
1) Check spring for correct range, damage such as erosion, corrosion, cracking, or compression below free height.
2) Check nozzle for cracks (NDE as applicable) or unusual wear.
3) Check disk assembly for cracks (NDE as applicable) or unusual wear.
4) Check spindle for trueness, bearing areas, and thread condition.
5) Check guide for wear and galling.
6) Check adjusting ring(s) for worn threads and wear.
7) Check ring pins for bent or broken pin and thread condition.
8) Check bellows, if provided, for pinholes and corrosion.
9) Check flange gasket facings for wear and cuts.
f) Machining
Machine nozzle and disk as necessary to the manufacturer’s critical dimension charts.
g) Lapping
1) Machine or hand lap disk and nozzle to be sure of flatness.
2) Lap bevel seats to a grey finish; then re-machine disk or plug to the manufacturer’s critical dimension.
h) Bearing Points
Grind all bearing areas with grinding compound to make sure they are round and true.
i) Assembly
1) Install nozzle
2) Install lower ring and guide ring to the measurement from c) 9) above or to manufacturer’s specifications.
3) Install guide
4) Install disc and holder
5) Install spindle
6) Install spring washers
7) Install bonnet
8) Install bonnet bolting
9) Install adjusting screw and lock nut to the measurement from c) 4) above,
10) Install release nut and lock nut, and cap and lever assembly, and
11) Document installation of replacement parts.
j) Testing
Test data shall be recorded. Testing will be done in accordance with manufacturer’s recommendations and appropriate ASME Code section. To preclude unsafe and unstable valve operations or erroneous performance test results, it is recommended that low volume testing equipment (e.g., gas cylinders without
a test vessel, hand pumps, tubing) should be avoided.
k) Sealing
After final adjusting and acceptance by quality control inspection, all external adjustments shall be sealed with a safety seal providing a means of identification of the organization performing the repair.
l) Nameplate

The repairer will place a repair nameplate on each repaired valve. The nameplate shall, as a minimum, meet the requirements of 4.7.1.

S4.3 PILOT OPERATED PRESSURE RELIEF VALVES

a) Visual Inspection as Received
1) This information is to be recorded:
a. Complete nameplate data, plus any other important information received from the customer;
b. User identification number, if applicable;
c. Seals on external adjustments (ensure seals are intact);
d. Identification on seal; and
e. Obvious damage and external condition including missing or misapplied parts.
b) Disassembly
1) Remove pilot and disassemble per manufacturer's maintenance instruction.
2) Disassemble main valve. Where lift adjustments are provided, do not remove the locking device or change the lift unless it is required as part of conversion.
3) Remove the nozzle if recommended by the manufacturer's maintenance instructions and/or when required as part of conversion.
c) Cleaning
1) Pilot — Components of pilot are small and must be handled carefully to prevent damage or loss. Clean parts and nameplates with solvents that will not affect the parent metal and/or polish with 500 grit paper.
2) Main Valve — Clean by appropriate means such as abrasive blast. Finishes of machined surfaces must not be affected. (Caution: Do not use a cleaning method that will damage the parts or nameplates.)
d) Inspection
1) Pilot
a. Check spring for damage such as corrosion, cracks, out of square ends, etc.
b. Inspect all parts for damage. Small burrs or scratches may be removed by polishing. Severely damaged parts should be replaced. (Internal components or pilots should not be repaired by machining as the functions of the pilot could easily be impaired.)
c. Check strainers and filters on inlet and outlet lines.
d. Replace all soft goods per manufacturer's recommendation.
2) Main Valve
a. Check nozzle seating surface for nicks. These can be removed by machining or lapping as required.
b. Check the piston and liner (or other moving member) for galling or excessive wear. The piston should move freely in the liner.
c. Replace soft goods or re-lap disk as required.
d. Where lift adjustments are provided, measure the lift per the manufacturer's specifications.
e) Testing
Test data shall be recorded. Testing will be done in accordance with the manufacturer's recommendation and in accordance with the applicable ASME Code section. To preclude unsafe and unstable valve operations
or erroneous performance test results, it is recommended that low volume testing equipment (e.g., gas cylinders without a test vessel, hand pumps, tubing) should be avoided.
f) Sealing
After final adjustment and acceptance by quality control, all external adjustments shall be sealed by means assuring positive identification of the organization performing the repair.
g) Nameplate
The repairer will place a repair nameplate on each repaired valve. The nameplate, as a minimum, shall meet
the requirements of 4.7.1.

S4.4 PACKAGING, SHIPPING AND TRANSPORTATION OF PRESSURE RELIEF DEVICES

a) The improper packaging, shipment, and transport of pressure relief devices can have detrimental effects on device operation. Pressure relief devices should be treated with the same precautions as instrumentation, with care taken to avoid rough handling or contamination prior to installation.
b) The following practices are recommended:
1) Valves should be securely fastened to pallets in the vertical position to avoid side loads on guiding surfaces except threaded and socket-weld valves up to NPS 2 (DN 50) may be securely packaged and cushioned during transport.
2) Valve inlet and outlet connection, drain connections, and bonnet vents should be protected during shipment and storage to avoid internal contamination of the valve. Ensure all covers and/or plugs are removed prior to installation.
3) The valve should not be picked up or carried using the lifting lever. Lifting levers should be wired or secured so they cannot be moved while the valve is being shipped or stored. These wires shall be removed before the valve is placed in service.
4) Pilot valve tubing should be protected during shipment and storage to avoid damage and/or breakage.
5) Valves for special services, including but not limited to oxygen, chlorine, and hydrogen peroxide, should be packaged in accordance with appropriate standards and/or owner procurement requirements.

SUPPLEMENT 5
RECOMMENDED GUIDE FOR THE DESIGN OF A TEST SYSTEM FOR PRESSURE RELIEF DEVICES IN COMPRESSIBLE FLUID SERVICE
S5.1 SCOPE
This supplement provides guidance for the design of a test system using compressible fluids (e.g., steam or
air/gas) and permits the determination of pressure relief valve set pressure and valve operating characteristics
such as blowdown.
The size of the test vessel needed depends on the size of the valve, its set pressure, the design of the test
system, and whether blowdown must be demonstrated. A repair organization may use the information provided
in this supplement to determine the minimum size test vessel needed so that the measured performance is characteristic of the valve and not the test system.

~~S5.2 GENERAL~~
a) The National Board administrative rules and procedures for the "VR" *Certificate of Authorization* and symbol stamp require that pressure relief valves, after repair, be tested in accordance with the manufacturer's
recommendations and the applicable ASME Code. The purpose of this testing is to provide reasonable assurance that valves will perform according to design when they are returned to service.
b) It is recognized that a full evaluation of the performance of some pressure relief valve designs requires testing at maximum allowable overpressure. However, it is beyond the scope of this supplement to define test equipment or facilities for such testing.
c) Section 6 of this part provides a glossary, S5.3 describes typical test equipment, and S5.4 provides data
for estimating the size of test vessels required.

(Renumber all remaining sections)

SUPPLEMENT 6
PROCEDURES FOR REPAIRS TO ASME "NV" STAMPED PRESSURE RELIEF DEVICES
S6.1 ~~INTRODUCTION~~SCOPE
This supplement provides procedures and requirements for repair of ASME Code "NV" Class 1, 2, or 3 stamped pressure relief devices, which have been capacity certified by the
National Board~~, may be repaired provided the following requirements are met~~.

(19) 4.7.2 REPAIR NAMEPLATE

When a pressure relief valve is repaired, a metal repair nameplate stamped with the information required below shall be securely attached to the valve adjacent to the original manufacturer's stamping or nameplate. If not installed directly on the valve, the nameplate shall be securely attached to the valve independent of the external adjustment seals in a manner that does not interfere with valve operation and sealed in accordance with the quality system.

a) Prior to attachment of the repair nameplate, the previous repair nameplate, if applicable, shall be removed from the repaired valve.

b) As a minimum, the information on the valve repair nameplate (see Figure 4.7.2-a) shall include:

1) The name of the repair organization preceded by the words "repaired by";

2) The "VR" repair symbol stamp and the "VR" certificate number;

3) Unique identifier (e.g., repair serial number, shop order number, etc.);

4) Date of repair;

5) Set pressure;

6) Capacity and capacity units (if changed from original nameplate due to set pressure or service fluid change);

7) Type/Model number (if changed from original nameplate by a conversion. See 4.2); and

8) When an adjustment is made to correct for service conditions of superimposed back pressure and/or temperature or the differential between popping pressure between steam and air (see 4.6.2), the information on the valve repair nameplate shall include the:

a. Cold Differential Test Pressure (CDTP); and

b. Superimposed Back Pressure (BP) (only when applicable).

FIGURE 4.7.2-a

EXAMPLE LAYOUT OF REQUIRED MARKINGS FOR REPAIR OF ASME/NATIONAL BOARD "V," "UV," AND "HV"- STAMPED PRESSURE RELIEF VALVES

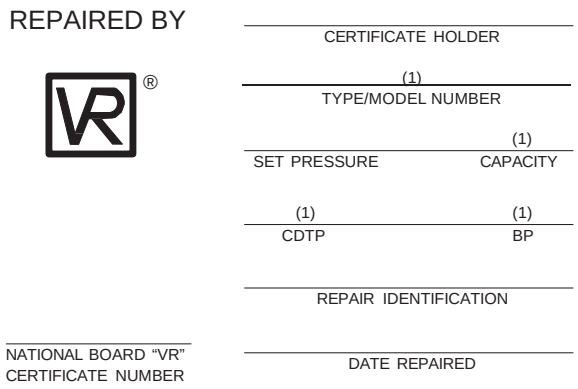

Note:. To be indicated only when changed.

Item 19-40 Proposal 7-25-19
Pg. 2/5

~~FIGURE 4.7.2-b~~

~~REQUIRED MARKINGS FOR REPAIR OF NUCLEAR PRESSURE RELIEF VALVES~~

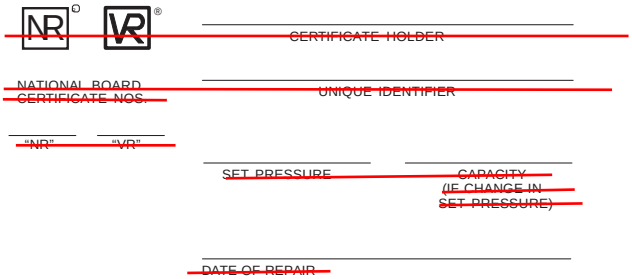

Relocate to Supplement 6

4.7.3 CHANGES TO ORIGINAL PRESSURE RELIEF VALVE NAMEPLATE INFORMATION

a) If the set pressure is changed, the set pressure, capacity, and blowdown, if applicable, on the original nameplate or stamping shall be marked out but left legible. The new capacity shall be based on that for which the valve was originally certified.

b) If the service fluid is changed, the capacity, including units, on the original nameplate or stamping shall be marked out but left legible. The new capacity shall be based on that for which the valve was originally certified, or if a conversion has been made, as described in 4.2 on the capacity certification for the valve as converted.

c) If the Type/Model number is changed, the Type/Model number on the original nameplate or stamping shall be marked out but left legible.

d) If the blowdown is changed, the blowdown, if shown on the original nameplate or stamping, shall be marked out but left legible. The new blowdown may be based on the current ASME Code requirements.

e) Repair organizations shall verify the Type/Model number, inlet size, set pressure, and capacity on the original nameplate or stamping that is not marked out. Incorrect information on the original manufacturer's nameplate or stamping shall be marked out but left legible. Corrected information shall be indicated on the repair nameplate and noted on the document as required by the quality system.

4.7.4 REPLACEMENT OF ILLEGIBLE OR MISSING NAMEPLATES

a) Illegible Nameplates

When the information on the original manufacturer's or assembler's nameplate or stamping is illegible, but traceability can be confirmed, the nameplate or stamping shall be augmented by a nameplate furnished by the "VR" stamp holder stamped "Duplicate." It shall contain all information that originally appeared on the nameplate or valve, as required by the applicable section of the ASME Code, except the "V," "HV," or "UV" symbol and the National Board mark. The repair organization's nameplate, with the "VR" stamp and other required data specified in 4.7.2, will make the repairer responsible to the owner and the Jurisdiction that the information on the duplicate nameplate is correct.

b) Missing Nameplates

When the original valve nameplate is missing, the repair organization is not authorized to perform repairs to the valve under the "VR" program, unless positive identification can be made to that specific valve and verification that the valve was originally stamped with an ASME "V" or UV" symbol or marked with an ASME "HV" symbol. Valves that can be positively identified shall be equipped with a duplicate nameplate,

SUPPLEMENT 6
PROCEDURES FOR REPAIRS OF NUCLEAR SAFETY RELATED PRESSURE RELIEF VAVLES

S6.1 SCOPE

Nuclear safety related pressure relief valves and power actuated pressure relief valves may be repaired provided the following requirements are met. Valves being repaired under these provisions are intended to be those protecting the nuclear pressure boundary. Other pressure relief valves in the nuclear power plant (such as pressure relief valves on air compressors and auxiliary boilers) shall be repaired as required by the applicable Jurisdiction.

S6.2 DEFINITIONS

Safety Related – As used in this supplement and when applied to nuclear power plants, safety related means a structure, system, or component or part thereof that affects its safety function necessary to assure:

a) The integrity of the reactor coolant pressure boundary;

b) The capability to shut down the reactor and maintain it in a safe shutdown condition; or

c) The capability to prevent or mitigate the consequence of accidents which could result in potential offsite exposures.

S6.3 NUCLEAR SAFETY RELATED VALVE GROUPS

These rules classify nuclear safety related pressure relief valves into three groups based upon the original code of construction and capacity certification status.

Group 1: ASME Section I and Section VIII pressure relief valves accepted by the Jurisdiction for use in nuclear safety related service with National Board capacity certification.

Group 2: ASME Section III "NV" stamped Class 1, 2, or 3 pressure relief valves with National Board capacity certification.

Group 3: Pressure relief valves not addressed in Group 1 or Group 2. This group shall include pressure relief valves without National Board capacity certification and/or pressure relief valves constructed to codes or standards other than ASME (see NBIC Part 3, Category 3).

The term pressure relief valve includes power actuated pressure relief valves. Replacement of rupture disks in rupture disk holders or in systems is not considered a repair activity under the scope of this supplement.

S6.4 ADMINISTRATIVE PROCEDURES

a) The repair organization shall obtain a “VR” *Certificate of Authorization*.

b) The repair organization shall obtain a National Board “NR” *Certificate of Authorization.* The requirements for said certificate include, but is not limited to, the following. The repair organization shall:

1) Maintain a documented quality assurance program that meets the applicable requirements of NBIC Part 3, 1.6. This program shall also include all the applicable requirements for the use of the “VR” stamp;

2) Have a contract or agreement with an Authorized Nuclear Inspection Agency that is qualified in accordance with the requirements of ASME QAI-1, *Qualifications for Authorized Inspection* to provide inspection of repaired nuclear pressure relief valves;

3) Successfully complete a survey of the quality assurance program and its implementation. This survey shall be conducted by representatives of the National Board, the Jurisdiction wherein the applicant's repair facilities are located, and the applicant's Authorized Inspection Agency. Further verification of such implementation by the survey team may not be necessary if the applicant holds a valid ASME "NV" certificate and can verify by documentation the capability of implementing the quality assurance program for repair of "NV"-stamped pressure relief valves, covered by the applicant's ASME "NV" certificate.

c) The application of the "NR" *Certificate of Authorization* and stamp shall clearly define the scope of intended activities with respect to the repair of nuclear pressure relief valves.

d) Revisions to the quality assurance program shall be acceptable to the Authorized Nuclear Inspector Supervisor and the National Board before being implemented.

e) The scope of the "VR" *Certificate of Authorization* shall include repair of nuclear pressure relief valves (denoted on the "VR" Certificate as Section III).

f) Verification testing of valves repaired by the applicant shall not be required provided such testing has been successfully completed under the applicant's "VR" certification program for the applicable test fluids.

g) A survey of the applicant for the "VR" *Certificate of Authorization* and endorsement of the repair of nuclear pressure relief valves may be made concurrently.

S6.5 GENERAL RULES

a) Group 1 and Group 2 pressure relief valves which have been repaired in accordance with these rules, shall be stamped with both the "VR" and "NR" stamps. They shall be classified as either "NR" Category 1 or Category 2 as applicable. Group 3 pressure relief valves which have been repaired in accordance with these rules shall be stamped with the "NR" stamp. They shall be classified as either "NR" Category 2 or Category 3 as applicable.

b) The "VR" and "NR" stamps shall be applied only to nuclear safety related pressure relief valves that have been disassembled, inspected, and repaired as necessary, such that the valves' condition and performance are equivalent to the standards for new valves. As a minimum, the information on the valve repair nameplate (see Figure S6.5-a) shall include:

1) The name of the certificate holder;
2) The "VR" and "NR" sybol stamps and certificate numbers;
3) Unique identifier (e.g., repair serial number, shop order number, etc.);
4) Date of repair;
5) Set pressure;
6) Capacity and capacity units (if changed from the original nameplate due to set pressure)

c) All measuring and test equipment used in the repair of pressure relief valves shall be calibrated against certified equipment having known valid relationships to nationally recognized standards.

d) Documentation of the repair of nuclear safety related pressure relief valves shall be recorded on the National Board Form NVR-1, *Report of Repair/ Replacement Activities for Nuclear Pressure Relief Devices*, in accordance with the requirements of NBIC Part 3, 1.6. The original code of construction and capacity certification status shall be identified on the NVR-1 form.

e) When an ASME "V", "UV" or "NV" stamped pressure relief device requires a duplicate nameplate because the original nameplate is illegible or missing, it may be applied using the procedures of NBIC Part 4, 4.7.5 provided concurrence is obtained from the Authorized Nuclear Inspector and Jurisdiction. In this case the nameplate shall be marked "SEC. I", "SEC. III", or "SEC. VIII" to indicate original ASME Code stamping.

f) Repair activities for pressure relief valves shall not include rerating of the device. Set pressure changes within the range of the valve manufacturer's capacity certification and the design pressure of the valve (see NBIC Part 4, 4.7.3) are permitted, provided the new set pressure and capacity rating are reconciled with the design of the system where the device will be used. These changes are not considered to be rerating.

g) Conversions of pressure relief valves as described in NBIC Part 4, 4.2 b) are permitted as part of repair activities.

h) Set pressure changes or conversions of pressure relief valves shall be described in the "Remarks" section of Form NVR-1.

FIGURE ~~4.7.2-b~~S6.5-a

EXAMPLE LAYOUT OF REQUIRED MARKINGS FOR REPAIR OF NUCLEAR PRESSURE RELIEF VALVES

NR ® O VR ®

CERTIFICATE HOLDER

NATIONAL BOARD CERTIFICATE NOS.

UNIQUE IDENTIFIER

"NR" "VR"

SET PRESSURE

CAPACITY (IF CHANGE IN SET PRESSURE)

DATE OF REPAIR

Relocate from from 4.7.2-b

4.7.3 CHANGES TO ORIGINAL PRESSURE RELIEF VALVE NAMEPLATE INFORMATION

a) If the set pressure is changed, the set pressure, capacity, and blowdown, if applicable, on the original nameplate or stamping shall be marked out but left legible. The new capacity shall be based on that for which the valve was originally certified.

b) If the service fluid is changed, the capacity, including units, on the original nameplate or stamping shall be marked out but left legible. The new capacity shall be based on that for which the valve was origi- nally certified, or if a conversion has been made, as described in 4.2 on the capacity certification for the valve as converted.

c) If the Type/Model number is changed, the Type/Model number on the original nameplate or stamping shall be marked out but left legible.

d) If the blowdown is changed, the blowdown, if shown on the original nameplate or stamping, shall be marked out but left legible. The new blowdown may be based on the current ASME Code requirements.

e) Repair organizations shall verify the Type/Model number, inlet size, set pressure, and capacity on the original nameplate or stamping that is not marked out. Incorrect information on the original manufacturer's nameplate or stamping shall be marked out but left legible. Corrected information shall be indicated on the repair nameplate and noted on the document as required by the quality system.

4.7.4 REPLACEMENT OF ILLEGIBLE OR MISSING NAMEPLATES

The VR Certificate Holder shall not perform repairs under the VR Program on any PRV that cannot be positively identified by the manufacturer or through in-house sources. Such identification shall include the verification of the original ASME Stamping. Pressure relief valves that have missing or illegible nameplates and can be positively identified shall be equipped with a new nameplate marked "DUPLICATE", which contains all original nameplate data. The replacement nameplate shall not bear the "NB" Mark or the ASME Certification Mark with the "V", "HV", or "UV" Designator or the supplanted "V", "HV", or "UV" Symbol. Instead, the nameplate shall be stamped "Sec. I", "Sec. IV", or "Sec. VIII", as applicable, to indicate the original stamping. Illegible nameplates, if applicable, shall not be removed.

~~a) Illegible Nameplates~~

~~When the information on the original manufacturer's or assembler's nameplate or stamping is illegible, but traceability can be confirmed, the nameplate or stamping shall be augmented by a nameplate furnished by the "VR" stamp holder stamped "Duplicate." It shall contain all information that originally appeared on the nameplate or valve, as required by the applicable section of the ASME Code, except the "V," "HV," or "UV" symbol and the National Board mark. The repair organization's nameplate, with the "VR" stamp and other required data specified in 4.7.2, will make the repairer responsible to the owner and the Jurisdiction that the information on the duplicate nameplate is correct.~~

~~b) Missing Nameplates~~

~~When the original valve nameplate is missing, the repair organization is not authorized to perform repairs to the valve under the "VR" program, unless positive identification can be made to that specific valve and verification that the valve was originally stamped with an ASME "V" or UV" symbol or marked with an ASME "HV" symbol. Valves that can be positively identified shall be equipped with a duplicate nameplate,~~

~~as described in this section, in addition to the repairer's "VR"-stamped nameplate. The repairer's respon- sibilities for accurate data, as defined in 4.7.5 a) shall apply.~~

~~c) Marking of Original Code Stamp~~

~~When a duplicate nameplate is affixed to a valve, as required by this section, it shall be marked "Sec. I," "Sec. IV," or "Sec. VIII," as applicable, to indicate the original ASME Code stamping.~~

~~(19) 4.7.5 REPLACEMENT OF ILLEGIBLE OR MISSING NAMEPLATES~~

~~a) Illegible Nameplates~~

~~When the information on the original manufacturer's or assembler's nameplate or stamping is illegible, but traceability can be confirmed, the nameplate or stamping shall be augmented by a nameplate furnished by the "VR" stamp holder stamped "Duplicate." It shall contain all information that originally appeared on the nameplate or valve, as required by the applicable section of the ASME Code, except the ASME Certification Mark and the "V", "UV", or "HV" Designator or the supplanted "V", "UV", or "HV" symbol and the National Board mark. The repair organization's nameplate, with the "VR" stamp and other required data specified in 4.7.2, will make the repairer responsible to the owner and the Jurisdiction that the information on the duplicate nameplate is correct.~~

~~b) Missing Nameplates~~

~~When the original valve nameplate is missing, the repair organization is not authorized to perform repairs to the valve under the "VR" program, unless positive identification can be made to that specific valve and verification that the valve was originally marked with the ASME Certification Mark and the "V", "UV", or "HV" Designator or the supplanted ASME "V" , "UV" or "HV" symbol. Valves that can be positively identified shall be equipped with a duplicate nameplate, as described in this section, in addition to the repairer's "VR"-stamped nameplate. The repairer's responsibilities for accurate data, as defined in 4.7.5(a) (Illegible Nameplates), shall apply.~~

~~c) Marking of Original Code Stamp~~

~~When a duplicate nameplate is affixed to a valve, as required by this section, it shall be marked "Sec. I", "Sec. IV", or "Sec. VIII", as applicable, to indicate the original ASME Code marking.~~

4.8 ACCREDITATION OF "VR" REPAIR ORGANIZATIONS

4.8.1 SCOPE

a) This section provides requirements that must be met for an organization to obtain a National Board *Certificate of Authorization* to use the "VR" Symbol Stamp for repair activities of pressure relief devices constructed in accordance with the requirements of the ASME Code.

b) For administrative requirements to obtain or renew a National Board "VR" *Certificate of Authorization* and "VR" Symbol Stamp, refer to NB-514, *Accreditation of "VR" Repair Organizations*.

4.8.2 JURISDICTIONAL PARTICIPATION

The National Board member Jurisdiction in which the "VR" organization is located is encouraged to participate in the review and demonstration of the applicant's quality system. The Jurisdiction may require participation in the review of the repair organization and the demonstration and acceptance of the repair organization's quality system manual.

2) Have a contract or agreement with an Authorized Nuclear Inspection Agency that is qualified in accordance with the requirements of ASME QAI-1, *Qualifications for Authorized Inspection* to provide inspection of repaired nuclear pressure relief valves;

3) Successfully complete a survey of the quality assurance program and its implementation. This survey shall be conducted by representatives of the National Board, the Jurisdiction wherein the applicant's repair facilities are located, and the applicant's Authorized Inspection Agency. Further verification of such implementation by the survey team may not be necessary if the applicant holds a valid ASME "NV" certificate and can verify by documentation the capability of implementing the quality assurance program for repair of "NV"-stamped pressure relief valves, covered by the applicant's ASME "NV" certificate.

c) The application of the "NR" *Certificate of Authorization* and stamp shall clearly define the scope of intended activities with respect to the repair of nuclear pressure relief valves.

d) Revisions to the quality assurance program shall be acceptable to the Authorized Nuclear Inspector Supervisor and the National Board before being implemented.

e) The scope of the "VR" *Certificate of Authorization* shall include repair of nuclear pressure relief valves (denoted on the "VR" Certificate as Section III).

f) Verification testing of valves repaired by the applicant shall not be required provided such testing has been successfully completed under the applicant's "VR" certification program for the applicable test fluids.

g) A survey of the applicant for the "VR" *Certificate of Authorization* and endorsement of the repair of nuclear pressure relief valves may be made concurrently.

S6.5 GENERAL RULES (19)

a) Group 1 and Group 2 pressure relief valves which have been repaired in accordance with these rules, shall be stamped with both the "VR" and "NR" stamps. They shall be classified as either "NR" Category 1 or Category 2 as applicable. Group 3 pressure relief valves which have been repaired in accordance with these rules shall be stamped with the "NR" stamp. They shall be classified as either "NR" Category 2 or Category 3 as applicable.

b) The "VR" and "NR" stamps shall be applied only to nuclear safety related pressure relief valves that have been disassembled, inspected, and repaired as necessary, such that the valves' condition and performance are equivalent to the standards for new valves.

c) All measuring and test equipment used in the repair of pressure relief valves shall be calibrated against certified equipment having known valid relationships to nationally recognized standards.

d) Documentation of the repair of nuclear safety related pressure relief valves shall be recorded on the National Board Form NVR-1, *Report of Repair/ Replacement Activities for Nuclear Pressure Relief Devices*, in accordance with the requirements of NBIC Part 3, 1.6. The original code of construction and capacity certification status shall be identified on the NVR-1 form.

e) When an ASME "V", "UV" or "NV" stamped pressure relief device requires a duplicate nameplate because the original nameplate is illegible or missing, it may be applied using the procedures of NBIC Part 4, ~~4.7.5~~4.7.4 provided concurrence is obtained from the Authorized Nuclear Inspector and Jurisdiction. In this case the nameplate shall be marked "SEC. I", "SEC. III", or "SEC. VIII" to indicate original ASME Code stamping.

f) Repair activities for pressure relief valves shall not include rerating of the device. Set pressure changes within the range of the valve manufacturer's capacity certification and the design pressure of the valve

SUPPLEMENT 7 (19)

RECOMMENDED PROCEDURES FOR TEST ONLY OF PRESSURE RELIEF VALVES

S7.1 INTRODUCTION (19)

a) It is essential that the test only organization establish basic, specific procedures for the testing of pressure relief valves. The purpose of these recommended procedures is to provide the test only organization with guidelines for this important aspect of valve testing. It is realized that there are many types of valves and conditions under which they are tested and, for this reason, the specific items in these recommended procedures may not apply, or they may be inadequate for each of those types or for the detailed test procedures that may be required for each valve.

b) If the valve is to be bench tested, ensure that all sources of pressure have been removed from the valve prior to removal from service. If the valve is to be field tested using system pressure, ensure that all sources of pressure are under the control of the person performing the test.

c) S7.2 contains recommended procedures for the test only of spring-loaded and pilot operated pressure relief valves.

S7.2 PRESSURE RELIEF VALVES (19)

a) Visual inspection

1) This information is to be recorded

a. User (customer) identification number;

b. Complete original pressure relief valve nameplate data, previous "VR" repair nameplate data, previous "T/O" test only nameplate data plus any important information received from customer.

c. If nameplate is missing, illegible or has incorrect information, the pressure relief valve shall not be tested. Relief valve should be sent to "VR" repair shop per paragraph ~~4.7.5~~4.7.4

2) Verify external adjustment seals are installed and match manufacturer and/or "VR" - "T/O" nameplate.

3) Check bonnet for venting on bellows type valves.

4) Check appearance for any unusual damage, missing, or misapplied parts. If sufficient damage or other unusual conditions are detected that may pose a safety risk during testing, set aside for review by the Quality Department.

b) Existing Nameplate

1) An existing "VR" Nameplate, if applicable, shall not be removed from the relief valve.

2) An existing "T/O" Nameplate shall be removed from the relief valve.

c) Relief Valve Data

1) “Set Pressure Definition” shall be obtained from National Board Document # NB-18.

2) Manufacturer’s steam to air correction factor, if applicable, shall be obtained from Manufacturer.

ITEM 19-41 Proposal 8-12-19
Pg. 5/12

4.3 Materials for Pressure Relief Valve Repair 38
4.3.1 Replacement Parts for Pressure Relief Devices 38
4.4 Welding for Pressure Relief Valves 39
4.4.1 Welding Procedure Specifications 39
4.4.2 Standard Welding Procedure Specifications 39
4.4.3 Performance Qualification 39
4.4.4 Welding Records 40
4.4.5 Welder's Identification 40
4.4.6 Welder's Continuity 40
4.4.7 Weld Repairs to Pressure Relief Valve Parts by an "R" Stamp Holder 40
4.5 Heat Treatment 41
4.5.1 Preheating 41
4.5.2 Postweld Heat Treatment 41
4.6 Pressure Relief Valve Performance Testing and Testing Equipment 41
4.6.1 Test Medium and Testing Equipment 41
4.6.2 Owner-User ASME Code Section VIII Steam Testing 42
4.6.3 Lift Assist Testing 42
4.6.4 Pressure Test of Parts 43
4.7 Stamping Requirements for Pressure Relief Devices 43
4.7.1 Nameplates 43
4.7.2 Repair Nameplates 44
4.7.3 Changes to Original Pressure Relief Valve Nameplate Information 45
~~4.7.4 Test Only Nameplate ..... 45~~
~~4.7.5~~4.7.4 Replacement of Illegible or Missing Nameplates 46
4.8 Accreditation of "VR" Repair Organizations 46
4.8.1 Scope 46
4.8.2 Jurisdictional Participation 46
4.8.3 Issuance and Renewal of the "VR" *Certificate of Authorization* 47
4.8.3.1 General 47
4.8.3.2 Issuance of Certificate 47
4.8.4 Use of the "VR" Authorization 47
4.8.4.1 Technical Requirements 47
4.8.4.2 Stamp Use 47
4.8.5 Quality System 47
4.8.5.1 General 47
4.8.5.2 Written Description 47
4.8.5.3 Maintenance of Controlled Copy 47
4.8.5.4 Outline of Requirements for a Quality System 48
4.8.6 Field Repair 53
4.8.6.1 Audit Requirements 53
4.8.6.2 Use of Owner or User Personnel 53
4.9 Training and Qualification of Personnel 53
4.9.1 Contents of Training Program 53
4.9.2 Qualification of Personnel 54
4.9.3 Annual Review of Qualification 54

Section 5 INTENTIONALLY LEFT BLANK 55

Section 6 Supplements 56

Supplement 1 Pressure Relief Valves on the Low Pressure side of Steam Pressure Reducing Valves 56
S1.1 Scope 56
S1.2 Pressure Relief Valve Capacity 56
S1.3 Calculation of Pressure Relief Valve Relieving Capacity 57
S1.4 Steam Flow When Flow Coefficients are Not Known 64
S1.5 Two-Stage Pressure Reducing Valve Stations 64

PART 4, SECTION 11
PRESSURE RELIEF DEVICES — INDEX

A

Acceptance
(Foreword), (2.5.6), (2,6.6),(4.3.1), (4.7.1), (4.8.2), (4.8.5.4), (4.9.2), (S3.3), (S4.2), (8.2), (9.1)

Accreditation
(Introduction), (1.4), (4.1), (4.2), (4.8.1), (9.1)
Programs
(Introduction)

Accumulator
(S5.3), (9.1), (Definitions)

Addenda
(Introduction), (8.2), (9.1), (10.1)

Adjustments
(3.2.2), (3.2.5), (3.2.6), (4.2), (4.6), (4.7), (4.8.5.4), (S2.5), (S3.1), (S3.2). (S3.3), (S3.4), (S3.5), (S4.2), (S4.3), (9.1)

Administrative Requirements
(Introduction), (4.1), (4.2), (4.8.4), (8.1)

Alteration
(Foreword), (Introduction), (4.1), (7.1), (7.2), (9.1)

American National Standards Institute (ANSI)
(Foreword), (9.1)

Annual Review
(4.9.3)

Appurtenances
(3.2)

ASME Code
(Introduction), (1.2), (2.4), (2.4.4), (4.2), (4.2.2), (4.4.1), (4.4.3), (4.6.1), (4.6.2), (4.7.3), (~~4.7.5~~4.7.4), (4.8.3.2), (4.8.5.1), (4.8.5.4), (4.9.1), (9.1), (S1.5), (S2.2), (S3.2), (S3.4), (S4.2), (S5.2), (S6.1), (S6.3)

Assembler
(4.2.4), (4.3.1), (~~4.7.5~~4.7.4), (4.8.3.2), (9.1)

Audit
(4.8.5.4), (4.8.6), (4.8.6.1)

Authority
(4.8.5.4), (4.8.6.2), (S3.2), (S3.4), (9.1)

Authorization
(Introduction), (1.4.1), (4.1), (4.8.1), (4.8.3), (4.8.3.1), (4.8.3.2), (4.8.4), (4.8.5.1), (4.8.5.3), (4.8.5.4), (4.8.6), (4.8.6.1), (9.1), (Definitions), (S3.0), (S5.2), (S6.1), (S6.2)

Authorization of Owner Users
(S3.0)

Authorized Inspection Agency (AIA)
(S6.2), (9.1), (Definitions)

Authorized Nuclear Inspector Supervisor (ANIS)
(S6.2)

B

Blowdown
(4.6.1), (4.6.2), (4.6.3), (4.7.3), (S2.2), (S2.3), (S2.5), (S3.2), (S5.1), (S5.4)

Boilers
Cast Iron
(2.4.2), (2.4.3)
Electric
(2.2.2), (2.2.4)
Firetube
(2.2.4)
Historical/Hobby
(Introduction)
Locomotive
(Introduction)
Organic and Inorganic Fluid
(3.2.6), (S2.4)
Watertube
(2.2.4)

C

Calculations
(2.5.4), (2.6.4), (7.3), (7.4). (8.4)

Calibration
(4.8.5.4), (S3.4)

(S1.1), (S2.4), (S2.5), (S5.1), (S5.2), (S5.3), (S6.3), (7.1), (8.4), (9.1)

Device Data
(3.2), (3.2.1)

Documentation
(Foreword), (Introduction), (4.4.7), (4.6.1), (4.6.3), (4.6.4), (4.8.5.4), (S3.2), (S3.3), (S3.4), (S6.2), (S6.3), (7.1), (9.1)

Drains
(2.3.6), (2.5.6), (2.6.6), (3.2.3)

Drawings
(4.3), (4.8.5.4), (8.4)

E

Economizers
(2.2.8)

Effective Edition
(Foreword)

Engineering Judgment
(Foreword), (7.2)

Erosion
(S4.2)

Evidence of Leakage
(3.2.2)

Examination
(Introduction), (4.8.5.4) (9.1)

Exhibits
(4.8.5.4)

F

Facility
(3.2.5), (3.2.6.1), (4.8.6.2), (S5.3)

Failure Mechanisms
(Introduction)

Fatigue
(3.2.4.4)

Feedwater
(2.2.4)

Field Repair
(1.4.1), (4.8.5.4), (4.8.6), (4.8.6.1)

Firebox
(2.2.4)

Fittings
(2.2.3), (2.5.6), (2.6.6), (9.1)

Flanges
(2.2.1), (S5.3)

Forced-Flow Steam Generators
(2.2.4), (2.2.6), (9.1)

Fuel
(2.2.4), (2.3.6), (2.4.2), (2.4.3), (2.4.4)

G

Gages
(2.3.6), (3.2.4.4), (4.8.5.4), (S5.3), (9.1)

H

HV
(4.2.1), (4.7.2), (~~4.7.5~~4.7.4), (4.8.5.4)

Heat Treatment
(Introduction), (4.5), (4.5.2), (4.8.5.4)

High Temperature Water
(2.2.1), (2.2.4), (2.2.5), (2.2.10), (2.4.5.2), (2.4.5.3), (9.1)

Hydrostatic Test
(9.1)

I

Identification Mark
(4.4.5)

Illegible Nameplates
(~~4.7.5~~4.7.4)

Inquiries
(Foreword), (8.1), (8.2), (8.5), (10.1)

Inservice Inspection
(Introduction), (1.1), (3.1), (9.1)

Inspection
(Foreword), (Introduction), (2.5.6), (2.6.6), (3.1), (3.2), (3.2.6.1), (3.2.6.2), (4.1), (4.2), (4.7.1), (4.8.5.1), (4.8.5.4), (S4.2), (S4.3), (S6.2), (8.4), (9.1)

ITEM 19-41 Proposal 8-12-19
Pg. 8/12

Install/Installation
(Foreword), (Introduction), (1.1), (1.2), (2.1), (2.2), (2.3), (2.4), (2.5), (2.6), (3.2), (4.1), (4.2.2), (4.3), , (4.4), (4.4.7), (S1), (S2), (S4.2), (S4.3), (S5.4)
Condition
(3.2), (3.2.6)
Requirements
(2.1)

Internal
(2.2.10), (2.4), (2.5), (3.2.4.4), (3.2.6), (4.6.1), (S1.3), (S4.3), (S4.4)

Interpretations
(Introduction), (Foreword), (8.1), (8.4), (10.1)

Intervening
(2.2.3), (2.2.7), (2.3.6), (2.4.2), (2.4.3), (2.4.4), (2.5.6), (2.6.6), (3.2.3), (S5.3), (9.1)

J

Jurisdiction
(Foreword), (Introduction), (1.2), (1.4), (2.2.11), (2.2.10), (2.5.4), (2.5.6), (2.6.4), (2.6.6), (3.2.3), (3.2.4.3), (3.2.5.2), (3.2.6.1), (4.1), (4.2.2), (~~4.7.5~~4.7.4), (S3.1), (S3.2), (S3.4), (S6.2), (S6.3), (9.1)

Jurisdictional Authority
(S3.2), (S3.4), (9.1)

Jurisdictional Requirements
(2.2.11), (2.5.6), (3.2.3), (3.2.6.1), (9.1)

K

L

Leakage
(2.3.6), (3.2.2), (3.2.3), (3.2.4.2), (3.2.4.4), (3.2.5), (3.2.6), (S2.4), (S2.5)

Lift Assist
(4.6.3)

Lift Assist Device
(3.2.5), (4.6.3), (9.1)

Loading
(2.2.11), (2.5.6)

Location
(1.4.1), (2.2.3), (2.2.7), (2.3.3), (2.3.6), (2.4.4), (2.5.3), (2.5.6), (2.6.3), (2.6.6), (3.2.2), (3.2.3), (4.4.7), (4.8.5.4), (S2.5)

M

Manual Control
(4.8.5.4)

Maximum Allowable Working Pressure (MAWP)-
(2.2.4), (2.2.5), (2.2.6), (2.3.5), (2.3.6), (2.4.2), (2.4.3), (2.4.4), (2.4.5.1), (2.4.5.2), (2.4.5.3), (2.5.2), (2.5.4), (2.5.5), (2.5.7), (2.6.2), (2.6.5), (3.2.1), (3.2.4.1), (S2.4), (S2.5)

Metrication
(Introduction), (7.1)

N

NBIC Committee
(Foreword), (Introduction), (4.2.2), (8.1), (8.5), (10.1)

"NR" Stamp
(S6.3)

"NV" Stamped Pressure Relief Devices
(S6.3)

Nameplate(s)
(3.2.1), (3.2.4.4), (3.2.6), (4.2), (4.2.1), (4.2.2), (4.8.5.4), (4.7.1), (4.7.2), (4.7.3), (~~4.7.4~~), (~~4.7.5~~4.7.4), (S3.1), (S3.5), (S4.2), (S4.3), (S6.3)

National Board
(Foreword), (Introduction), (1.4.1), (2.2.2), (2.4.1.6), (2.4.2), (2.4.3), (2.4.4), (2.4.5.2), (2.4.5.3), (2.5.1), (2.5.4), (2.6.1), (2.6.4), (3.2.5), (3.2.6.2), (4.1), (4.2.1), (4.4.4), (4.4.7), (4.6.1), (~~4.7.5~~4.7.4), (4.8.1), (4.8.2), (4.8.3), (4.8.5.4), (S5.2), (S6.1), (S6.2), (S6.3), (8.1), (9.1)

Neutralized
(3.2.5)

Nonconformity
(4.8.5.4)

Nondestructive Examination
(4.8.5.4)

Nuclear Items
(Introduction), (4.1), (9.1)

O

Orifices
(S5.4)

Organization
(Foreword), (Introduction), (1.4), (1.4.1), (3.2.5), (3.2.6), (4.1), (4.2.3), (4.7.2), (4.7.3), (~~4.7.5~~4.7.4), (4.8.1), (4.8.2), (4.8.3.2), (4.8.5.4), (4.8.6), (4.9.1), (4.9.2), (4.9.3), (S3.1), (S3.2), (S3.6), (S4.1) (S4.2), (S4.3), (S5.1), (S6.2)

Owner
(Introduction), (2.5.4), (2.6.4), (3.2.5), (4.4.7), (4.6.2), (~~4.7.5~~4.7.4), (4.8.5.4), (4.8.6.2), (S4.2), (S4.4),
(9.1)

Owner-User
(Introduction), (4.6.2), (4.8.5.4), (8.1), (S3.0)

Owner-User Inspection Organization
(Introduction), (9.1)

P

Parts
(Foreword), (Introduction), (2.2.6), (3.2.2), (3.2.5), (3.2.6), (4.2), (4.3), (4.4.7), (4.6), (4.8.5.4), (S4.3), (8.4)

Performance Qualification
(4.4.3), (4.4.4), (4.4.6)

Performance Testing
(4.6), (4.6.1), (4.8.6.1)

Permissible (PRD) Installation
(2.4.1.1.1), (2.4.4.2)

Personnel Safety
(Introduction)

Pilot Operated Safety Relief Valves
(2.2.1), (S4.3)

Piping
(Foreword), (2.2.11), (2.2.6), (2.2.9), (2.2.10), (2.3.6) (2.4.1.5), (2.4.1.6), (2.4.2), (2.4.3), (2.4.4), (2.4.4.2), (2.4.4.7), (2.5.3), (2.5.4), (2.5.6), (2.6), (2.6.1), (2.6.2), (2.6.3), (2.6.4), (2.6.6), (3.2.3), (3.2.4.3), (3.2.6), (S2.5), (S5.3)

Pit
(4.4)

Plug
(S4.2), (S4.4)

Postweld Heat Treatment
(4.5.2), (4.8.5.4)

Potable Water Heater
(2.1), (2.4.4), (2.4.4.3), (9.1)

Preheating
(4.5.1)

Pressure Control
(S2.5), (S5.3)

Pressure Reducing Valves
(2.2.9), (S1.1), (S1.5)

Pressure Relief Devices
(1.1), (1.2), (1.3), (2.1), (2.3.2), (2.3.3), (2.3.4), (2.3.5), (2.3.6), (2.5), (2.5.1), (2.5.2), (2.5.3), (2.5.4), (2.5.5), (2.5.6), (2.5.7), (2.6), (2.6.1), (2.6.2), (2.6.3), (2.6.4), (2.6.5), (2.6.6), (3.1), (3.2), 3.2.3), (3.2.5), (3.2.6), (4.1), (4.2.2), (4.2.3), (4.3), (4.3.1), (4.6.1), (4.7), (S4.8.1), (S2.5), (S4.4), (S5), (S6.1), (S6.2), (S6.3), (9.1)

Pressure Retaining
(3.2.1), (4.2), (4.2.2)

Pressure-Retaining Item (PRI)
(Foreword), (Introduction), (2.1), (2.4), (3.2.1), (4.1), (4.2), (4.2.2), (4.2.3), (4.3.1), (9.1)

Pressure Test
(3.2.2), (3.2.5), (3.2.5.2), (3.2.6)
- **Parts**
  (4.6.4)
- **Repairs**
  (4.8.5.4)

Pressure Vessels
(Foreword), (Introduction), (2.5), (2.5.2), (2.5.4), (2.5.6), (3.2.4.3), (3.2.4.4), (3.2.6), (4.8.5.4), (S2.5)

Procedure Qualification
(4.4.4)

Pumps
(2.4.4)

Q

Qualification
(Introduction), (1.4.1)
Test Equipment
(4.6.1)
Lift Assist
(4.6.3)
PRV Personnel
(4.9), (4.9.2), (4.9.3), (S3.3)
Welding
(4.4.3), (4.4.4), (4.4.6), (4.8.5.4), (8.4)

Quality System
(Introduction), (1.4.1), (4.2), (4.4.7), (4.6.1), (4.6.3), (4.7.2), (4.7.3), (4.8.2), (4.8.5.1), (4.8.5.2), (4.8.5.3), (4.8.5.4), (4.8.6), (4.8.6.1), (4.8.6.2), (4.9.1), (4.9.3), (S3.2), (S3.4)

R

"R" Certificate Holder
(4.4.7), (4.8.5.4), (9.1)

Renewal
(1.4.1), (4.8.3)

Repair
(Foreword), (Introduction), (1.1), (1.2), (1.4), (1.4.1), (2.2.6), (2.5.6), (2.6.6), (3.2.1), (3.2.4.3), (3.2.5), (3.2.5.2), (3.2.6), (3.2.6.2), (4.3), (4.4), (4.4.7), (4.6), (4.7), (4.8), (4.8.5.4), (4.8.6), (4.9.1), (4.9.2), (4.9.3), (4.1), (4.2), (S3.1), (S3.5), (S3.6), (S4.1), (S4.2), (S4.3), (S2.5), (S5.1), (S5.2), (S5.4), (S6.2), (S6.3), (7.1), (9.1)

Repair Organization
(Introduction) (4.1), (4.2.3), (4.7.2), (4.7.3), (~~4.7.5~~4.7.4), (4.8.1), (4.8.2), (4.8.3.2), (4.8.5.4), (4.8.6), (4.9.1), (4.9.2), (4.9.3), (S4.1), (S5.1), (S6.2)

Replacement of Illegible or Missing Nameplates
(~~4.7.5~~4.7.4)

Replacement Parts
(4.3.1), (4.6.4), (4.8.5.4), (S4.2)

Request
(Foreword), (Introduction), (1.4.1), (8.1), (8.3), (8.4), (10.1)

Responsibility
(Foreword), (Introduction), (4.8.5.4)

Review
(Foreword), (Introduction), (1.4.1), (2.5.4), (2.6.4), (4.8.2), (4.8.5.2), (4.8.5.4), (4.9.3), (8.4), (9.1)

Revisions
(Foreword), (Introduction), (4.8.5.3), (4.8.5.4), (S6.2), (8.1), (8.3)

Rupture Disk
(2.3.2), (2.3.6), (2.5.4), (2.6.4), (3.2), (3.2.4.4), (4.2.3)

S

Safe Point of Discharge
(2.2.10), (2.4.1.5), (9.1)

Safety
(Foreword), (Introduction), (3.2), (3.2.4.2), (3.2.6), (4.1), (S1.1), (S4.2), (S7.2)

Safety Device
(Introduction), (3.2), (3.2.4.2)

Safety Valve
(9.1), (S11)

Scope of Activities (Accreditation)
(Introduction), (1.4.1)

Seals
(3.2.2), (4.2.3), (4.7.1), (S4.2), (S4.3)

Service Conditions
(3.2.6), (4.7.2), (S2.4), (S2.5)

Service Fluid
(2.3.2), (3.2.5), (4.2), (4.7.2), (4.7.3)

Set Pressure
(2.2.5), (2.2.6), (2.2.7), (2.3.5), (2.3.6), (2.4.3), (2.4.4), (2.5.5), (2.6.5), (3.2), (3.2.1), (3.2.2), (3.2.4.4), (3.2.5), (3.2.6), (4.6.1), (4.6.2), (4.6.3), (4.7.2), (4.7.3), (4.7.4), (S2.1), (S2.2), (S2.3), (S2.4), (S2.5), (S3.1), (S3.2), (S3.5), (S3.6), (S4.2), (S5.1), (S5.3), (S5.4), (S6.3)

Settings
(2.2.11), (2.2.5), (2.5.6), (9.1)

Shipping and Transportation
(S4.1), (S4.4)

Shop
(1.4.1), (4.7.2), (4.8.5.4), (4.8.6), (9.1)

Specifications
(1.2), (4.3.1), (4.4.1), (4.4.2), (4.6.4), (4.8.5.4), (S4.2), (S4.3)

Spring Loaded Pressure Relief Valves
(2.2.1), (S4.1), (S4.2)

Stamping
(Introduction), (3.2.1), (4.4.7), (4.7), (4.7.2), (4.7.3), (4.7.4), ~~(4.7.5)~~, (4.8.5.1), (4.8.5.4), (S3.1), (S3.5), (S6.3)

Steam Heating Boilers
(2.1), (2.4.2), (3.2.5), (3.2.6), (S2.3)

Steam Supply
(2.2.9)

Stop Valves
(2.2.6), (2.5.6), (2.6.6)

Superimposed Back Pressure (BP)
(4.7.2)

Supports
(Introduction), (2.2.11), (2.5.6), (3.2.3), (4.4.6)

T

Technical Inquiries
(8.1), (10.1)

Temperature and Pressure Relief Valves
(2.4.1.6), (2.4.3), (2.44), (3.2.5), (3.2.6)

Test Medium
(3.2.5), (4.6.1), (4.6.3), (4.8.5.4), (S5.3), (S5.4)

Test Only
(4.1), (~~4.7.4~~3.5.2)

Test System (PRV)
(S5.1), (S5.3)

Test Vessel
(4.6.1) (S4.2), (S5.1), (S5.2), (S5.3), (S5.4)

Testing
(Foreword), (Introduction), (1.1), (3.1), (3.2), (3.2.2), (3.2.5), (3.2.6), (4.1), (4.2), (4.2.4), (4.6), (4.6.1), (4.6.2), (4.6.3), ~~(4.7.4),~~ (4.8.5.1), (4.8.5.4), (4.8.6.1), (7.1), (S3.4), (S4.2), (S4.3), (S5.2), (S5.3), (S6.2)

Tests
(Introduction), (3.2.6), (4.6), (4.6.3), (S4.2)

Thermal Fluid Heaters
(2.3.1), (2.3.2)

Threaded Connections
(2.4.1.2), (2.4.4.4)

Training
(4.9.1), (4.9.3), (S3.2)

Transient
(S5.3), (9.1)

Transport Tanks (DOT)
(Introduction)

Tubes
(2.2.7), (2.2.4), (2.4.5.2), (2.4.5.3)

Tubesheet
(Table 2.2.4)

U

Unique Identifier
(4.4.7), (4.7.2), (4.8.5.4)

Units of Measurement
(Introduction)

User
(Foreword), (Introduction), (3.6.2.1), (3.6.2.2), (4.6.2), (4.8.3.2), (4.8.5.4), (4.8.6.2), (S2.5), (S3.1), (S3.2), (S3.3), (S3.4), (S4.2), (S4.3), (9.1)

V

"VR" Authorization
(Introduction)

"VR" Certificate Holder
(3.2.5.2), (4.3), (4.3.1), (4.4.2), (4.4.4), (4.4.5), (4.4.7), (4.6.4), (4.8.5.4), (4.8.6.2), (9.1)

"VR" *Certificate of Authorization*
(4.8.1), (4.8.3), (4.8.5.1), (4.8.5.3), (4.8.5.4), (4.8.6), (S5.2), (S6.2)

"VR" Stamp
(~~4.7.5~~4.7.4), (4.8.4.1), (4.8.5.4), (S6.2)

"VR" Symbol
(4.8.1), (4.8.3.1), (4.8.3.2), (4.8.4.2)

Valve Repair
(4.1), (4.3), (4.3.1), (4.4), (4.7.2), (4.8.4.1), (4.8.5.2), (4.8.5.4), (4.9.2), (S4.1)

Valves
(Introduction), (1.4), (1.4.1), (2.2), (2.2.1), (2.2.3), (2.2.4), (2.2.5), (2.2.6), (2.2.7), (2.2.8), (2.2.9), (2.2.10), (2.3.2), (2.3.6), (2.4), (2.4.1), (2.4.1.1), (2.4.1.1.1), (2.4.1.1.2), (2.4.1.3), (2.4.1.4), (2.4.1.5), (2.4.1.6), (2.4.2), (2.4.3), (2.4.4), (2.4.4.1), (2.4.4.2), (2.4.4.3), (2.4.4.5), (2.4.4.6), (2.4.4.7), (2.4.5), (2.4.5.2), (2.4.5.3), (2.5.1), (2.5.4), (2.5.6), (2.6.1), (2.6.6), (3.2), (3.2.2), (3.2.3), (3.2.4.2), (3.2.4.3), (3.2.4.4), (3.2.5), (3.2.6), (3.2.6.1), (4.1), (4.2.1), (4.2.2), (4.2.4), (4.4), (4.6.1), (4.6.2), (4.6.3), (4.6.4), (4.7.1), (4.7.2), (~~4.7.5~~4.7.4), (4.8.3.2), (4.8.5.4), (4.8.6),
(4.8.6.2), (S1.1), (S1.2), (S1.3), (S1.5), (S2.2), (S2.4), (S2.5), (S3.1), (S3.2), (S4.1), (S4.2), (S4.3), (S4.4), (S5.2), (S5.3), (S5.4), (S6.2), (S6.3)

Vaporizers
(3.2.6), (S2.4)

Verification
(4.6.1), (4.6.3), (~~4.7.5~~4.7.4), (4.8.5.4), (S6.2)

Verification Testing (PRDs)
(4.6.1), (4.6.3), (4.8.5.4), (S6.2)

Visual Inspection
(3.2.4.4), (3.2.6.1), (S4.2), (S4.3)

W

Water Head
(S5.3), (9.1)

Water Heaters
(2.4.4), (3.2.3), (3.2.4.2), (3.2.5), (3.2.6), (9.1)

Welder
(4.4.5), (4.4.6), (4.8.5.4)

Welder's Continuity
(4.4.6)

Welder's Identification
(4.4.5)

Welding
(4.2.3), (4.4), (4.5), (4.6.4), (4.8.5.1), (4.8.5.4), (8.4), (9.1)

Welding Operator
(4.4.3), (4.4.5), (4.4.6), (4.8.5.4)

Welding Records
(4.4.4)

Weld Repair
(4.4.7), (4.4)

X

Y

Z

NBIC Part 1 Item 19-49

2.9.1 VALVE REQUIREMENTS – GENERAL (19)

a) Only direct spring loaded, pilot operated, or power actuated pressure relief valves designed to relieve steam shall be used for steam service.

b) Pressure relief valves shall be manufactured in accordance with a national or international standard.

c) Deadweight or weighted-lever pressure relief valves shall not be used.

d) For high-temperature water boilers, safety relief valves shall have a closed bonnet, and valve bodies shall not be constructed of cast iron.

e) Pressure relief valves with an inlet connection greater than NPS 3 (DN 80) used for pressure greater than 15 psig (103 kPa), shall have a flange or a welded inlet connection. The dimensions of flanges subjected to boiler pressure shall conform to the applicable standards.

f) When a pressure relief valve is exposed to outdoor elements that may affect operation of the valve, the valve may be shielded with a cover. The cover shall be vented and arranged to permit servicing and normal operation of the valve.

g) Shipping caps or plugs shall be removed prior to installation.

3.9.1 PRESSURE RELIEF VALVE REQUIREMENTS – GENERAL

The following general requirements pertain to installing, mounting, and connecting pressure relief valves on heating boilers.

a) Shipping caps or plugs shall be removed prior to installation.

Item 19-54: Request for Revision to NBIC Part 4, S7.2 f) 1)

Purpose	S7 is needed to give T/O Organizations procedural guidance for implementation of T/O requirements in Part 4, Section 3. Such guidance needs to agree with the requirements of Part 4, Section 3.
Scope:	Part: Pressure Relief Devices & Pressure Relief Devices; Section: 3 & S7; Paragraph: 3.3.4 c) & S7.2 f) 1)
Background:	The Term "all external adjustments" is taken from ASME Original Code of Construction where is most certainly applies. However, in implementation of T/O, only one of several possible external adjustments may need to be made. The T/O Seals indicate which of the possible adjustments was made.
Proposed Revision:	See below for the proposed revision.

S7.2 PRESSURE RELIEF VALVES

f) Sealing

1) After completion of set pressure test, set pressure restoration (if applicable) and seat tightness testing, only seals removed for adjustment or testing using a lift assist device ~~all external adjustments~~ shall be sealed in accordance with the original code of construction with a seal providing a means of identification of the organization performing the set pressure test.

ITEM 19-70 Proposal 10-3-19

Part 4

2.6.3 LOCATION

Pressure relief devices, except those covered by NBIC Part 4, 2.~~1~~ 2 through 2.~~2~~4, may be installed at any location in the system provided the pressure in any portion of the system cannot exceed the maximum overpressure permitted by the original code of construction. Pressure drop to the pressure relief device under flowing conditions shall be considered when determining pressure relief device location. The pressure-relief device shall not be isolated from the piping system except as permitted by 2.6.6 e).

Item 19-72: Request for Revision to NBIC Part 4, 4.6.2

Purpose	An ASME Code change in the 2019 Edition of Sec VIII-1 has made it impossible for an Owner/User VR Holder to use the CDTP Field of the VR Nameplate to document the Manufacturer's Correction Factor for a Steam Service PRV tested on Air as permitted by NBIC Part 4, Sec 4.6.2. When an Owner/User applies the aforementioned factor, it needs to be documented for the repair history of the PRV to ensure an accurately set PRV.
Scope:	Part: Pressure Relief Devices; Section: 4.6; Paragraph: 4.6.2
Background:	Due to changes in ASME Sec VIII-1, Para UG-129(a) and UG-136(d)(4) regarding separation of CDTP and the Manufacturer's correction for differential in set pressure between steam and air, the CDTP on the VR Repair Nameplate will no longer serve as the indication of the use of the Manufacturer's correction for differential in set pressure between steam and air. Consequently, the Correction Factor should be documented on the VR Traveler required by NBIC Part 4, Sec 4.8.5.4 i) to indicate use of the Correction Factor.
Proposed Revision:	See below for the proposed revision.

4.6.2 OWNER-USER ASME CODE SECTION VIII STEAM TESTING

When ASME Code Section VIII valves are repaired by the owner for the owner's own use, valves for steam service may be tested on air for set pressure and, if possible, blowdown adjustment, provided the valve manufacturer's corrections for differential in set pressure between steam and air are applied to the set pressure. When applied, the manufacturer's correction for differential in set pressure between steam and air shall be indicated on the repair document described in 4.8.5.4 i).

Item 19-75: Part 4, 2.2.2

Proposed Change to Part 4:
2.2.2 NUMBER
At least one National Board capacity certified pressure relief valve shall be installed on the boiler. If the boiler has more than 500 ft2 (46 m2) of heating surface, or if an electric boiler has a power input of more than 3.76 million BTU/hr (1100 kW), two or more National Board capacity certified pressure relief valves shall be installed. For a boiler with combined bare tube and extended water-heating surface exceeding 500 ft2 (47 m2), two or more pressure relief valves are required only if the maximum designed steaming capacity of the boiler exceeds 4,000 lb/hr (1 800 kg/h).

Explanation of Need: Item 19-51 makes this proposed change to Part 1, 2.9.1.1, but the proposal never included changes to the duplicate section in Part 4. This item will ensure that the approved language for Part 1 gets reflected in Part 4.

Background: There is a discrepancy between ASME Section I, PG-67.1, NBIC Part 1, 2.9.1.1, and NBIC Part 4, 2.2.2. ASME requires 2 or more safety valves if over 500 sq. ft. If there is combined bare tube and extended heating surface exceeding 500 sq. ft., 2 or more safety valves are required only if the boiler exceeds 4000 lbs./hr. NBIC requires 2 or more safety valves if over 500 sq. ft. It does not make allowances for extended heating surface and generating capacity up to 4000 lbs./hr.

Approved Change to Part 1 (for reference):
2.9.1.1 NUMBER
At least one National Board capacity certified pressure relief valve shall be installed on the boiler. If the boiler has more than 500 ft2. (46.5 m2) of heating surface, or if an electric boiler has a power input of more than 3.76 million Btu/hr (1,100 kW), two or more National Board capacity certified pressure relief valves shall be installed. For a boiler with combined bare tube and extended water-heating surface exceeding 500 ft2 (47 m2), two or more pressure relief valves are required only if the maximum designed steaming capacity of the boiler exceeds 4,000 lb/hr (1 800 kg/h).

Item 19-76: Request for Revision to NBIC Part 4, 3.3.3.4 p)

Purpose	Referenced paragraph refers to "VR" Certificate of Authorization for record retention. It should refer to "T/O" Certificate of Authorization since this is in the T/O quality elements section.
Scope:	Part: Pressure Relief Devices; Section: 3; Paragraph: 3.3.3.4 p)
Background:	See purpose.
Proposed Revision:	See below for the proposed revision.

3.3.3.4 OUTLINE OF REQUIREMENTS FOR A QUALITY SYSTEM

p) Records Retention

The quality manual shall describe a system for filing, maintaining, and easily retrieving records supporting or substantiating the administration of the Quality System within the scope of the "~~VR~~T/O" *Certificate of Authorization*. The record retention schedule described in the Quality System Manual is to follow the instructions identified in Table 3.3.3.4 p).

Committee Member: Daniel Marek **Vote Date:** 2019-09-03 **Vote:** Disapproved **Uploads:**

Member Comment:

SX.1: Does the Scope of this supplement limit the media stored in the composite vessel? Can the vessels be used in both gas and liquid applications?\

SX.4: If multiple media are allowed, should not piping load criteria be to the applicable Code, not limited to ASME B31.12 which applies to Hydrogen systems only.

SX.7 d): If the vessel is used for the storage of air or water, can a relief device with lifting lever be used?

SX.7 e): Are there any restrictions on location and size of openings? Minimum net flow area of opening?

SX.7 f): Built up backpressure requirement?

SX.7 g): Can the set point exceed MAWP when multiple relief devices are installed if allowed in the original Code of construction? Can the set point exceed MAWP when relief devices meant for fire protection only if allowed in the original Code of construction?

SX.7 h): Should not the capacity be sufficient to prevent overpressure in excess of that allowable by the original Code of construction?

Committee Member: Thakor Patel **Vote Date:** 2019-09-09 **Vote:** Approved **Uploads:**

Member Comment:

I support Adam's comments and use the word MAWP instead of design pressure. The word "MAWP" used in the construction standard. Also specify the permissible overpressure for in the proposal.

Committee Member: Adam Renaldo **Vote Date:** 2019-08-12 **Vote:** Approved **Uploads:**

Member Comment:

Change SX.7gCurrently:"g) The pressure relief device(s) shall be set at a pressure not exceeding the MAWP of the vessel. "Change to: "g) At least one pressure relief device shall be set at a pressure not exceeding the MAWP of the vessel. Additional pressure relief devices shall be set no higher than 105% of the MAWP of the vessel." The proposed edit will bring SX.7g into compliance with ASME Section VIII, Div 3, KR-162."KR-162 MULTIPLE PRESSURE RELIEF DEVICES If the required discharging capacity is supplied by more than one device, only one need be set to operate at a pressure not exceeding the design pressure of the vessel. The additional device or devices may be set at a higher pressure but not to exceed 105% of the design pressure of the vessel. The requirements of KR-150 shall also apply."

PM Reply:

I agree with the suggestion, but I think ASME Section X is the more appropriate wording; it's very close to the VIII-3 wording. RR-130 covers the same items as KR-150. I've made the change to the document and added it here as R2 for your review.

"When a single pressure relieving device is used, it shall
be set to operate at a pressure not exceeding the design
pressure of the vessel. When the required capacity is
provided in more than one pressure relieving device,
only one device need be set at or below the design pressure,
and the additional devices may be set to open at
higher pressures but in no case at a pressure higher
than 105% of the design pressure. The requirements of RR-130 shall also apply."

NB11-1901

SUPPLEMENT X
INSTALLATION OF HIGH PRESSURE COMPOSITE PRESSURE VESSELS

SX.1 SCOPE

This supplement provides requirements for the installation of high-pressure composite pressure vessels. This supplement is applicable to pressure vessels with an MAWP not exceeding 15,000 psi, and is applicable to the following classes of vessels:

a) Metallic vessel with a Fiber Reinforced Plastic FRP) hoop wrap over the shell part of the vessel both load sharing)

b) Metallic vessel with a full FRP wrap (both load sharing)

c) FRP vessel with a non-load sharing metallic liner

d) FRP vessel with a non-load sharing non-metallic liner

SX.2 SUPPORTS

Design of supports, foundations, and settings shall consider the dead loads, live loads, wind, and seismic loads. Vibration and thermal expansion shall also be considered. The design of supports, foundations, and settings shall be in accordance with ASCE/SEI 7, *Minimum Design Loads for Buildings and Other Structures*. The importance factors used in calculating the seismic and wind loads shall be the highest value specified for any category in ASCE/SEI 7.

SX.3 CLEARANCES

The pressure vessel installation shall allow sufficient clearance for normal operation, maintenance, and inspection. Stacking of pressure vessels is permitted. The minimum clear

space between pressure vessels shall be 1 ft. vertical and 2 ft. horizontal. Vessel nameplates shall be visible after installation for inspection. The location of vessels containing flammable fluids shall comply with NFPA 2. The vessel owner shall document the vessel pressure and pipe diameters used as a basis for compliance with NFPA 2 location requirements.

SX.4 PIPING LOADS

Piping loads on vessel nozzles shall be determined by a formal flexibility analysis per ASME B31.12: paragraph IP-6.1.5(b). The piping loads shall not exceed the maximum nozzle loads defined by the vessel manufacturer.

SX.5 MECHANICAL CONNECTIONS

Mechanical connections shall comply with pressure vessel manufacturer’s instructions, and with requirements of the Jurisdiction. Connections to threaded nozzles shall have primary and secondary seals. The seal design shall include a method for detecting a leak in the primary seal. Seal functionality shall be demonstrated at the initial pressurization of the vessel.

SX.6 PRESSURE INDICATING DEVICES

Each pressure vessel shall be equipped with a pressure gage mounted on the vessel. The dial range shall be from 0 psi to not less than 1.25 times the vessel MAWP. The pressure gage shall have an opening not to exceed 0.0550in (1.4mm) (No. 54 drill size) at the inlet connection. In addition, vessel pressure shall be monitored by a suitable remote pressure indicating device with alarm having an indicating range of 0 psi to not less than 1.25 times the vessel MAWP.

SX.7 PRESSURE RELIEF DEVICES

Each pressure vessel shall be protected by pressure relief devices per the following requirements:

a) Pressure relief devices shall be suitable for the intended service.

b) Pressure relief devices shall be manufactured in accordance with a national or international standard and certified for capacity (or resistance to flow for rupture disk devices) by the National Board.

c) Dead weight or weighted lever pressure relief valves are prohibited.

d) Pressure relief valves shall not be fitted with lifting devices.

e) The pressure relief device shall be installed directly on the pressure vessel with no isolation valves between the vessel and the pressure relief device except:

1) When these isolation valves are so constructed or positively controlled below the minimum required capacity, that closing the maximum number of valves at one time will not reduce the pressure relieving capacity, or

2) Upon specific acceptance of the Jurisdiction, an isolation valve between vessel and its pressure relief device may be provided for vessel inspection and repair only. The isolation valve shall be arranged so it can be locked or sealed open.

f) The discharge from pressure relief device(s) shall be directed upward to prevent any impingement of escaping fluid upon the vessel, adjacent vessels, adjacent structures, or personnel. The discharge must be to outdoors, not under any structure or roof that might permit formation of a “cloud”. The pressure relief device(s) discharge piping shall be designed so that it cannot become plugged by

animals, insects, rainwater, or other materials.

g) The pressure relief device(s) shall be set at a pressure not exceeding the MAWP of the vessel.

h) The pressure relief device(s) shall have sufficient capacity to ensure the pressure vessel does not exceed the MAWP of that specified in the original code of construction.

i) The owner shall document the basis for selection of the pressure relief device(s) used, including capacity.

j) The owner shall have such analysis available for review by the Jurisdiction.

k) Pressure relief devices and discharge piping shall be supported so that reaction forces are not transmitted to the vessel.

l) Heat detection system: a heat activated system shall be provided so that vessel contents will be vented per f) (above), if any part of the vessel is exposed to a temperature greater than 220ºF.

m) Positive methods shall be incorporated to prevent overfilling of the vessel.

SX.8 ASSESSMENT OF INSTALLATION

a) Isolation valve(s) shall be installed directly on each vessel, but not between the vessel and the pressure relief device except as noted in 3.7, e), above.

b) Vessels shall not be buried.

c) Vessels may be installed in a vault subject to a hazard analysis, verified by the manufacturer, owner, user, qualified engineer, or the Jurisdiction, to include as a minimum the following:

1) Ventilation

2) Inlet and outlet openings

3) Access to vessels

4) Clearances

5) Intrusion of ground water

6) Designed for cover loads

7) Explosion control

8) Ignition sources

9) Noncombustible construction

10) Remote monitoring for leaks, smoke, and fire

11) Remote controlled isolation valves

d) Fire and heat detection/suppression provisions shall comply with the requirements of the Jurisdiction and, as a minimum, include relief scenarios in the event of a fire or impending overpressure from heat sources.

e) Installation locations shall provide the following:

1) Guard posts shall be provided to protect the vessels from vehicular damage per NFPA 2.

Protection from wind, seismic events shall be provided.

2) Supports and barriers shall be constructed of non-combustible materials.

3) Vessels shall be protected from degradation due to direct sunlight.

4) Access to vessels shall be limited to authorized personnel.

5) Any fence surrounding the vessels shall be provided with a minimum of two gates. The gates shall open outward, and shall be capable of being opened from the inside without a key.

6) Access for initial and periodic visual inspection and NDE of vessels, supports, piping, pressure gages or devices, relief devices and related piping, and other associated equipment.

7) Completed installations shall be validated as required by the Jurisdiction as addressing all of the above, and any requirements of the Jurisdiction, prior to first use. This verification shall be posted in a conspicuous location near the vessel and, when required, on file with the Jurisdiction. Certificates shall be updated as required by mandated subsequent inspections.

8) Piping installation shall comply with ASME B31.12 or NFPA 2.

9) The vessels shall be electrically bonded and grounded per NFPA 55.

SX.9 LADDERS AND RUNWAYS

See NBIC Part 1, Section 1.6.4 *Ladders and Runways*

Action Item Request Form

2019 Main Committee Letter Ballot Comments:

Committee Member:	Joel Amato	**Vote Date:**	2019-07-31	**Vote:**	Disapproved	**Uploads:**	
Member Comment:	I disapprove this ballot because I believe the operational test on the completed installation must be witnessed by an inspector.						

Committee Member:	James Pillow	**Vote Date:**	2019-07-31	**Vote:**	Abstention	**Uploads:**	
Member Comment:	I'm sure that those that heard the discussions on this item are not confused, but 1.6.10c) is confusing to me. What boiler/PV component pressure test is not documented on the MDR when 1.6.10a) requires a pressure test of the COMPLETED boiler/PV?						

8.2 CODE REVISIONS OR ADDITIONS

Request for Code revisions or additions shall provide the following:

Existing Text:

2.10.2 PRESSURE TEST

Prior to initial operation, the completed boiler, including pressure piping, water columns, superheaters, economizers, stop valves, etc., shall be pressure tested in accordance with the original code of construction. Any pressure piping and fittings such as water columns, blowoff valves, feedwater regulators, superheaters, economizers, stop valves, etc., which are shipped connected to the boiler as a unit, shall be hydrostatically tested with the boiler and witnessed by an Inspector.

2.10.4 SYSTEM TESTING

Prior to final acceptance, an operational test shall be performed on the complete installation. The test data shall be recorded and the data made available to the jurisdictional authorities as evidence that the installation complies with the provisions of the governing code(s) of construction. This operational test may be used as the final acceptance of the unit.

3.10.1 PRESSURE TEST

Prior to initial operation, the completed boiler, individual module, or assembled module, shall be subjected to a pressure test in accordance with the requirements of the original code of construction.

4.6 TESTING AND ACCEPTANCE

a) The installer shall exercise care during installation to prevent loose weld material, welding rods, small tools, and miscellaneous scrap metal from getting into the vessel. The installer shall inspect the interior of the vessel and its appurtenances where possible prior to making the final closures for the presence of foreign debris.

b) The completed pressure vessel shall be pressure tested in the shop or in the field in accordance with the original code of construction. When required by the Jurisdiction, owner or user, the Inspector shall witness the pressure test of the completed installation, including piping to the pressure gage, pressure relief device, and, if present, level control devices.

4.7.6 TESTING AND ACCEPTANCE

Testing and acceptance shall be in accordance with NBIC Part 1, 4.6

b) Statement of Need

NB10-1201 Covered reformatting multiple items. Pressure Testing was inconsistent between the three sections and really needs to be addressed

c) Background Information

Consolidation of Testing and Final Acceptance to Section 1 General.

Proposed Wording:

1.6.10 TESTING AND FINAL ACCEPTANCE

~~Boilers, heaters, or pressure vessels may not be placed into service until its installation has been inspected and accepted by the appropriate jurisdictional authorities.~~

a) The completed boiler/ pressure vessel shall be pressure tested in the shop and/or in the field in accordance with the original code of construction and documented on the appropriate Manufacturer's Data Report.

b) The installer shall exercise care during installation to prevent loose weld material, welding rods, small tools, and miscellaneous scrap metal from getting into the vessel. Prior to making the final closure the installer shall inspect the interior of the vessel and its appurtenances for the presence of foreign debris.

c) Subject to the jurisdictional requirements, a leak test may be performed on any components whose pressure test is not documented under the items' Manufacturer's Data Report. This leak test should not exceed 90% of the lowest pressure relief device setpoint. The test data shall be recorded, and the data made available as required.

d) Prior to final acceptance, an operational test shall be performed on the completed installation. The test shall include operating controls, limit controls and safety devices. The test data shall be recorded, and the data made available to the Jurisdictional Authorities as evidence that the installation complies with provisions of the governing code(s) of construction.

2.10.2 PRESSURE TEST

See NBIC Part 1, Section 1.6.10, *TESTING AND FINAL ACCEPTANCE*

~~Prior to initial operation, the completed boiler, including pressure piping, water columns, superheaters, economizers, stop valves, etc., shall be pressure tested in accordance with the original code of construction. Any pressure piping and fittings such as water columns, blowoff valves, feedwater regulators, superheaters, economizers, stop valves, etc., which are shipped connected to the boiler as a unit, shall be hydrostatically tested with the boiler and witnessed by an Inspector.~~

2.10.4 SYSTEM TESTING

See NBIC Part 1, Section 1.6.10, *TESTING AND FINAL ACCEPTANCE*

~~Prior to final acceptance, an operational test shall be performed on the complete installation. The test data shall be recorded and the data made available to the jurisdictional authorities as evidence that the installation complies with the provisions of the governing code(s) of construction. This operational test may be used as the final acceptance of the unit.~~

3.10.1 PRESSURE TEST

See NBIC Part 1, Section 1.6.10, *TESTING AND FINAL ACCEPTANCE*

~~Prior to initial operation, the completed boiler, individual module, or assembled module, shall be subjected to a pressure test in accordance with the requirements of the original code of construction.~~

4.6 TESTING AND ACCEPTANCE

See NBIC Part 1, Section 1.6.10, *TESTING AND FINAL ACCEPTANCE*

~~a) The installer shall exercise care during installation to prevent loose weld material, welding rods, small tools, and miscellaneous scrap metal from getting into the vessel. The installer shall inspect the interior of the vessel and its appurtenances where possible prior to making the final closures for the presence of foreign debris.~~

~~b) The completed pressure vessel shall be pressure tested in the shop or in the field in accordance with the original code of construction. When required by the Jurisdiction, owner or user, the Inspector shall witness the pressure test of the completed installation, including piping to the pressure gage, pressure relief device, and, if present, level control devices.~~

4.7.6 TESTING AND ACCEPTANCE

See NBIC Part 1, Section 1.6.10, *TESTING AND FINAL ACCEPTANCE*

~~Testing and acceptance shall be in accordance with NBIC Part 1, 4.6~~

Old wording that has been submitted as a letter ballot to the MC:

a) The completed boiler/ pressure vessel shall be pressure tested in the shop and/or in the field in accordance with the original code of construction.

b) The installer shall exercise care during installation to prevent loose weld material, welding rods, small tools, and miscellaneous scrap metal from getting into the vessel. Prior to making the final closure. The installer shall inspect the interior of the vessel and its appurtenances where possible prior to making the final closures for the presence of foreign debris.

c) Subject to the jurisdictional requirements, Prior to final acceptance, an operational pressure test, with the approval of the jurisdiction if required, shall may be performed on any components whose pressure test is not documented under the items' Manufacturer's Data Report. This pressure test should not exceed 90% of the lowest pressure relief device setpoint. The test data shall be recorded and the data made available as required. This operational test may be used as the final acceptance of the unit.

Comments for Ballot: NB16-01-02	
Welch,Paul voted: Approve 10/19/2016 1:50:39 PM	I recommend approval with a minor change to the proposed wording in para b. second sentence to read: Prior to final acceptance, an operational test, with the approval of the Jurisdiction, shall be performed...
Pillow,James voted: Approve 10/6/2016 8:00:39 AM	I approve the proposal, but suggest a minor editorial change in last sentence of first paragraph as follows. Prior to making the final closures, the installer shall inspect the interior of the vessel and its appurtenances where possible for the presence of foreign debris.
Webb,Michael voted: Disapprove 10/5/2016 3:01:27 PM	At this time, I will vote to "disapprove" this item. My understanding of this action item was to; generally consolidate the pressure testing requirements of the various Part 1, Sections into a more general practice to be described in Part 1, Section 1-General Guidelines. In my read whether intended or my misunderstanding, the product of the SC-Installation effort may have offered the ASME code-required pressure testing to be circumvented as presented in the SC-proposed paragraph "b)". To add, I would propose for consideration the item as presented in the attachment or otherwise presented be inserted as: Part 1, Section 1, 1.4.1 b) with the current 1.4.1 b) re-introduced to become 1.4.1 c). As a note to the attachment: the text in red represents the text implying the operational test may satisfy final acceptance of the unit.–M. Webb, 10-5-16 Reference Document: NB16-0102-letter ballot Part 1 Section 1 G. Guidelines proposed 1.4.1. b. 10-5-16.pdf
Troutt,Robby voted: Disapprove 10/5/2016 8:09:44 AM	My disapproval is based on the lack of reference to a jurisdictional inspection prior to the operational test in paragraph (b). Some jurisdictions do not allow an operational test prior to the initial inspection.
Sekely,Jim voted: Approve 10/3/2016 1:07:21 PM	1.?? b): Change who's to whose

NBIC Part 1 Item 19-49

2.9.1 VALVE REQUIREMENTS – GENERAL (19)

a) Only direct spring loaded, pilot operated, or power actuated pressure relief valves designed to relieve steam shall be used for steam service.

b) Pressure relief valves shall be manufactured in accordance with a national or international standard.

c) Deadweight or weighted-lever pressure relief valves shall not be used.

d) For high-temperature water boilers, safety relief valves shall have a closed bonnet, and valve bodies shall not be constructed of cast iron.

e) Pressure relief valves with an inlet connection greater than NPS 3 (DN 80) used for pressure greater than 15 psig (103 kPa), shall have a flange or a welded inlet connection. The dimensions of flanges subjected to boiler pressure shall conform to the applicable standards.

f) When a pressure relief valve is exposed to outdoor elements that may affect operation of the valve, the valve may be shielded with a cover. The cover shall be vented and arranged to permit servicing and normal operation of the valve.

g) Shipping caps or plugs shall be removed prior to installation.

3.9.1 PRESSURE RELIEF VALVE REQUIREMENTS – GENERAL

The following general requirements pertain to installing, mounting, and connecting pressure relief valves on heating boilers.

a) Shipping caps or plugs shall be removed prior to installation.

Item 19-77: Request for Revision to NBIC Part 1, 1.4.5.1.1 6), 10), and 20)

Purpose	Cast aluminum boilers have been incorporated in ASME Section IV for a number of years now and it's time they be recognized in the NBIC.
Scope:	Part: Installation; Section: 1 ; Paragraph: 1.4.5.1.1 items 6, 10 and 20
Background:	The installation report and guide were developed prior to cast aluminum boilers becoming an official part of ASME Section IV. It's suggested the guide item numbers and associated areas of the installation report be revised to incorporate cast aluminum boilers.
Proposed Revision:	See below for the proposed revision.

1.4.5.1.1 GUIDE FOR COMPLETING NATIONAL BOARD BOILER INSTALLATION REPORT

1) INSTALLATION: Indicate the type and date of installation — new, reinstalled, or second hand.

2) INSTALLER: Enter the installer's name and physical address.

3) OWNER-USER: Enter the name and mailing address of the owner-user of the boiler.

4) OBJECT LOCATION: Enter the name of the company or business and physical address where the installation was made.

5) JURISDICTION NO.: Enter the Jurisdiction number if assigned at the time of installation.

6) NATIONAL BOARD NO.: Enter the assigned National Board number.
Note:
Cast-iron ~~section~~and cast aluminum boilers do not require National Board registration.

7) MANUFACTURER: Enter the boiler manufacturer's name.

8) MFG. SERIAL NO.: Enter the assigned boiler manufacturer's serial number.

9) YEAR BUILT: Enter the year the boiler was manufactured.

10) BOILER TYPE: Enter the type of boiler, e.g., watertube, firetube, cast iron, cast aluminum, electric, etc.

11) BOILER USE: Enter the service for which or for how the boiler will be used, e.g., heating (steam or water), potable water, etc.

12) FUEL: Enter the type of fuel, e.g., natural gas, diesel, wood, etc. If more than one fuel type, enter the types for which the boiler is equipped.

13) METHOD OF FIRING: Enter the method of firing, e.g., automatic, hand, stoker, etc.

14) Btu/KW INPUT: Enter the Btu/hr or kW input of the boiler.

15) Btu/KW OUTPUT: Enter the Btu/hr or kW output of the boiler.

16) OPERATING PSI: Enter the allowed operating pressure.

17) ASME CODE STAMP(S): Check the ASME Code stamp shown on the code nameplate or stamping of other certification mark (specify).

18) STAMPED MAWP: Enter the maximum allowable working pressure shown on the nameplate or stamping.

19) HEATING SURFACE SQ. FT.: Enter the boiler heating surface shown on the stamping or nameplate.
Note:
This entry is not required for electric boilers.

20) CAST IRON/ALUMINUM: Enter the total number of sections for cast-iron/cast aluminum boilers.
Note:
Not all cast boilers are sectional. Mono-block cast boilers should be described as having one (1) section.

SUPPLEMENT 10
INSPECTION OF STATIONARY HIGH-PRESSURE (3,000-15,000 psi) (21-103 MPa) COMPOSITE PRESSURE VESSELS

S10.1 SCOPE

This supplement provides specific requirements and guidelines for inspection of high-pressure composite pressure vessels, hereafter referred to as vessels. This supplement is applicable to pressure vessels with a design pressure that exceeds 3,000 psi (21 MPa) but not greater than 15,000 psi (103 MPa), and is applicable to the following four types of pressure vessels:

a) Metallic vessel with a hoop Fiber Reinforced Plastic (FRP) wrap over the cylindrical part of the vessel (both load sharing).

b) Fully wrapped FRP vessel with a non-load sharing metallic liner.

c) Fully wrapped FRP vessel with a non-load sharing non-metallic liner.

d) Fully wrapped FRP vessel with load sharing metallic liner.

This supplement is intended for inspection of ASME Section X, Class III, vessels and ASME Section VIII, Division 3, Composite Reinforced Pressure Vessels (CRPVs). However, it may be used for inspection of similar vessels manufactured to other construction codes with approval of the jurisdiction in which the vessels are installed.

S10.2 GENERAL

a) High-pressure composite vessels are used for the storage of fluids at pressures up to 15,000 psi (103 MPa). Composite vessels consist of the FRP laminate with load sharing or non-load sharing metallic shells/liners, or nonmetallic liners. The FRP laminate with load sharing metallic liners form the pressure retaining system. The FRP laminate is the pressure-retaining material for composite vessels with non-load sharing metallic and nonmetallic liners. The purpose of the non-load sharing metallic and the nonmetallic liners is to minimize the permeation of fluids through the vessel wall.

b) Fluids stored in vessels are considered to be non corrosive to the materials used for vessel construction. The laminate is susceptible to damage from:

   1) External chemical attack.

   2) External mechanical damage (i.e. abrasion, impact, cuts, dents, etc.).

   3) Structural damage (i.e. over pressurization, distortion, bulging, etc.).

   4) Environmental degradation [i.e. ultraviolet (if there is no pigmented coating or protective layer), ice, etc.].

   5) Fire or excessive heat.

S10.3 INSPECTOR QUALIFICATIONS

a) The ~~The~~ Inspector referenced in this supplement is a National Board Commissioned Inspector complying with the requirements of NB-263. RCI-1 *Rules for Commissioned Inspector*.

b) The inspector shall be familiar with vessel construction and qualified by training and experience as described in NBIC Part 2, S4.5 to conduct such inspections. The inspector shall have a thorough understanding of all required inspections, tests, test apparatus, inspection procedures, and inspection

techniques and equipment applicable to the types of vessels to be inspected. The inspector shall have basic knowledge of the vessel material types and properties. Refer to Part 2, S4.2 and S4.5

S10.4 INSPECTION FREQUENCY

a) Initial Inspection

The vessel shall be given an external visual examination by the Inspector or the Authority having jurisdiction where the vessel is installed and during the initial filling operation. The examination shall check for any damage during installation prior to initial filling and for any leaks or damage during and at the conclusion of filling.

b) Subsequent Filling Inspections

Before each refilling of the vessel, the manager of the facility shall visually examine the vessel exterior for damage or leaks. Refilling operations shall be suspended if any damage or leaks are detected and the vessel shall be emptied and subsequently inspected by the Inspector to determine if the vessel shall remain in service.

c) Periodic Inspection

Within 30 days of the anniversary of the initial operation of the vessel during each year of its service life, the vessel shall be externally examined by the Inspector or the Authority having jurisdiction where the vessel is installed. Internal inspections shall only be required if any of the conditions of S10.9 a) are met. These examinations are in addition to the periodic acoustic emission examination requirements of S10.5 c).

S10.5 INSERVICE INSPECTION

a) NBIC Part 2, Section 1, of this part shall apply to inspection of high-pressure vessels, except as modified herein. This supplement covers vessels, and is not intended to cover piping and ductwork, although some of the information in this supplement may be used for the inspection of piping and ductwork.

b) The inspection and testing for exposed load sharing metallic portions of vessels shall be in accordance with NBIC Part 2, Section 2.3.

c) All composite vessels shall have an initial acoustic emission examination per S10.10 ~~after the first three years from the date of manufacture. Thereafter, vessels shall have~~ at a maximum examination interval of five years which may be more frequent based on the results of any external inspection per S10.8 or internal inspections per S10.9.

All vessels shall be subject to the periodic inspection frequency given in S10.4.

S10.6 ASSESSMENT OF INSTALLATION

a) The visual examination of the vessel requires that all exposed surfaces of the vessel are examined to identify any degradation, defects, mechanical damage, or environmental damage on the surface of the vessel.

The causes of damage to vessels are:

1) abrasion damage;

2) cut damage;

3) impact damage;

4) structural damage;

5) chemical or environmental exposure damage or degradation; and

6) heat or fire damage.

The types of damage found are:

1) cracks;

2) discolored areas;

3) gouges and impact damage;

4) leaks;

5) fiber exposure;

6) blisters;

7) delaminations;

8) surface degradation; and

9) broken supports.

b) The visual examination of the vessel requires that the identity of the vessel shall be verified. This shall include the construction code (ASME) to which the vessel was constructed, vessel serial number, maximum allowable operating pressure, date of manufacture, vessel manufacturer, date of expiration of the service life of the vessel, and any other pertinent information shown on the vessel or available from vessel documents. The overall condition of the vessel shall be noted.

S10.7 VISUAL EXAMINATION

a) Acceptable Damage

Acceptable damage or degradation is minor, normally found in service, and considered to be cosmetic. This level of damage or degradation does not reduce the structural integrity of the vessel. This level of damage or degradation should not have any adverse effect on the continued safe use of the vessel. This level of damage or degradation does not require any repair to be performed at the time of in-service inspection. When there is an external, non load bearing, sacrificial layer of filaments on the vessel, any damage or degradation should be limited to this layer. Damage or degradation of the structural wall shall not exceed the limits specified in Tables S10.7-a or S10.7-b.

b) Rejectable Damage (Condemned—Not Repairable)

Rejectable damage or degradation is so severe that structural integrity of the vessel is sufficiently reduced so that the vessel is considered unfit for continued service and shall be condemned and removed from service. No repair is authorized for vessels with rejectable damage or degradation.

c) Acceptance Criteria for Repairable Damage

Certain, specific types of damage can be identified by the external in-service visual examination. Indications of certain types and sizes may not significantly reduce the structural integrity of the vessel and may be acceptable so the vessel can be left in service. Other types and larger sizes of damages may reduce the structural integrity of the vessel and the vessel shall be condemned and removed from service. Tables S10.7-a or S10.7-b are a summary of the acceptance/rejection criteria for the indications that are found by external examination of the vessel.

d) Fitness for service

1) If a visual examination reveals that a vessel does not meet all criteria of Table S10.7-a or S10.7-b satisfactorily, it shall be taken out of service immediately, and either be condemned or a fitness for service examination be conducted by the original vessel manufacturer or legal successor who must also hold a National Board "R" certificate. When the vessel is taken out of service, its contents shall be immediately safely vented or transferred to another storage vessel per the owner's written safety procedures.

2) If a fitness for service examination is to be conducted, the original vessel manufacturer shall be contacted as soon as possible after the rejectable defects have been found. The manufacturer shall then determine the vessel fitness-for-service by applicable techniques, (e.g., acoustic emission testing, ultrasonic testing, and/or other feasible methods). The manufacturer shall have documentation that the evaluation method(s) used is satisfactory for determining the condition of the vessel. Repairs to the outer protective layer may be made by a "R" certificate holder other than the original manufacturer following the original manufacturer's instructions.

3) Determination of fitness for service is restricted to original manufacturer or legal successor.

TABLE S10.7-a

VISUAL ACCEPTANCE/REJECTION CRITERIA FOR COMPOSITE PRESSURE VESSELS (U.S. CUSTOMARY UNITS)

Type of Degradation or Damage	Description of Degradation or Damage	Acceptable Level of Degradation or Damage	Rejectable Level of Degradation or Damage
Abrasion	Abrasion is damage to the filaments caused by wearing or rubbing of the surface by friction.	Less than 0.050 in. depth in the pressure bearing thickness.	≥ 0.050 in. depth in the pressure bearing thickness.
Cuts	Linear indications flaws caused by an impact with a sharp object.	Less than 0.050 in. depth in the pressure bearing thickness.	≥ 0.050 in. depth in the pressure bearing thickness.
Impact Damage	Damage to the vessel caused by striking the vessel with an object or by being dropped. This may be indicated by discoloration of the composite or broken filaments and/or cracking.	Slight damage that causes a frosted appearance or hairline cracking of the resin in the impact area.	Any permanent deformation of the vessel or damaged filaments.
Delamination	Lifting or separation of the filaments due to impact, a cut, or fabrication error.	Minor delamination of the exterior coating less than a depth of 0.050 in.	Any loose filament ends showing on the surface at a depth ≥ 0.050 in. Any bulging due to interior delaminations.
Heat or Fire Damage	Discoloration, charring or distortion of the composite due to temperatures beyond the curing temperature of the composite.	Merely soiled by soot or other debris, such that the cylinder can be washed with no residue.	Any evidence of thermal degradation or discoloration or distortion.
Structural Damage – bulging, distortion, depressions	Change in shape of the vessel due to severe impact or dropping.	None	Any visible distortion, bulging, or depression.

Type of Degradation or Damage	Description of Degradation or Damage	Acceptable Level of Degradation or Damage	Rejectable Level of Degradation or Damage
Chemical attack	Environmental exposure that causes a change in the composite or failure of the filaments.	Any attack that can be cleaned off and that leaves no residue or evidence of permanent damage.	Any permanent discoloration or loss or softening of material under the exterior coat.
Cracks	Sharp, linear indications	None	None
Scratches/Gouges	Sharp, linear indications caused by mechanical damage.	Less than 0.050 in. depth in the pressure bearing thickness No structural fibers cut or broken.	≥ 0.050 in. depth in the pressure bearing thickness or structural fibers cut or broken.
Soot	A deposit on the composite caused by thermal or environmental exposure.	Soot that washes off and leaves no residue.	Any permanent marking that will not wash off the surface under the exterior coating.
Over pressurization	Excessive pressure due to operational malfunction.	~~None reported~~ Pressure between MAWP and test pressure, with approval of the manufacturer	Any report of pressurization beyond the ~~MAWP~~ test pressure or any indication of distortion.
Corrosion	Degradation of the composite due to exposure to specific corrosive environments.	None visible in excess of manufacturer's specification	Any surface damage to structural material identified as corrosion beyond the manufacturer's specification. (See Note 2)
Dents	A depression in the exterior of the vessel caused by impact or dropping.	< 1/16 in. in depth	Any dents with a depth ≥ 1/16 in. Or with a diameter greater than 2 inches.
Reported collision, accident, or fire	Damage to the vessel caused by unanticipated excursion from normally expected operating conditions.	None reported	Any indication or report of impact or heat damage.
Environmental Damage or Weathering	Ultraviolet or other environmental attack under the exterior coating..	None	Any discoloration that can not be washed off. (See Note 2)
Damage to a protective or sacrificial layer	Abrasion, cuts, chemical attack, scratches/gouges, corrosion, environmental damage, or crazing that are limited only to the protective or sacrificial layer.	The depth of any damage to the protective or sacrificial layer that does not exceed the thickness of the protective or sacrificial layer plus 0.050 inch.	The depth of any damage to the protective or sacrificial layer that exceeds the thickness of the protective or sacrificial layer plus 0.050 inch.
Crazing	Hairline surface cracks only in the composite resin.	Light hairline cracks only in the resin.	Any damage to the filaments.

Note 1:

SUPPL. 10

Only damage beyond the sacrificial or coated layer should be considered, and that any damage to sacrificial or coated layers should be repaired by suitable techniques (i.e. epoxy filler). Refer to Manufacturer's Data Report for sacrificial layer thickness.

Note 2:

Washing off UV scale will accelerate attack into lower composite layers. For this reason, if there is superficial UV damage the affected area should be cleaned and painted with a UV tolerant paint. If broken, frayed, or separated fibers to the non sacrificial layer greater than a depth of 0.050 in., are discovered during the cleaning process then the vessel shall be condemned.

TABLE S10.7-b

VISUAL ACCEPTANCE/REJECTION CRITERIA FOR COMPOSITE PRESSURE VESSELS (SI UNITS)

Type of Degradation or Damage	Description of Degradation or Damage	Acceptable Level of Degradation or Damage	Rejectable Level of Degradation or Damage
Abrasion	Abrasion is damage to the filaments caused by wearing or rubbing of the surface by friction.	Less than 1.3 mm. depth in the pressure bearing thickness.	≥ 1.3 mm depth in the pressure bearing thickness.
Cuts	Linear indications flaws caused by an impact with a sharp object.	Less than 1.3 mm. depth in the pressure bearing thickness.	≥1.3 mm depth in the pressure bearing thickness.
Impact Damage	Damage to the vessel caused by striking the vessel with an object or by being dropped. This may be indicated by discoloration of the composite or broken filaments and/or cracking.	Slight damage that causes a frosted appearance or hairline cracking of the resin in the impact area.	Any permanent deformation of the vessel or damaged filaments.
Delamination	Lifting or separation of the filaments due to impact, a cut, or fabrication error.	Minor delamination of the exterior coating less than a depth of 1.3 mm.	Any loose filament ends showing on the surface at a depth ≥ 0.050 in. Any bulging due to interior delaminations.
Heat or Fire Damage	Discoloration, charring or distortion of the composite due to temperatures beyond the curing temperature of the composite.	Merely soiled by soot or other debris, such that the cylinder can be washed with no residue.	Any evidence of thermal degradation or discoloration or distortion.
Structural Damage – bulging, distortion, depressions	Change in shape of the vessel due to sever impact or dropping.	None	Any visible distortion, bulging, or depression.
Chemical attack	Environmental exposure that causes a change in the composite or failure of the filaments.	Any attack that can be cleaned off and that leaves no residue or evidence of permanent damage.	Any permanent discoloration or loss or softening of material under the exterior coat.
Cracks	Sharp, linear indications	None	None
Scratches/Gouges	Sharp, linear indications caused by mechanical damage.	Less than 1.3 mm depth in the pressure bearing thickness No structural fibers cut or broken.	≥ 1.3 mm depth in the pressure bearing thickness or structural fibers cut or broken.

Type of Degradation or Damage	Description of Degradation or Damage	Acceptable Level of Degradation or Damage	Rejectable Level of Degradation or Damage
Soot	A deposit on the composite caused by thermal or environmental exposure.	Soot that washes off and leaves no residue.	Any permanent marking that will not wash off the surface under the exterior coating.
Over pressurization	Excessive pressure due to operational malfunction.	~~None reported~~ Pressure between MAWP and test pressure, with approval of the manufacturer	Any report of pressurization beyond the ~~MAWP~~ Test Pressure or any indication of distortion.
Corrosion	Degradation of the composite due to exposure to specific corrosive environments.	None visible in excess of manufacturer's specification	Any surface damage to structural material identified as corrosion beyond the manufactuere's specificaton.
Dents	A depression in the exterior of the vessel caused by impact or dropping.	< 1.6 mm depth	Any dents with a depth ≥ 1.6 mm Or with a diameter greater than 51 mm.
Reported collision, accident, or fire	Damage to the vessel caused by unanticipated excursion from normally expected operating conditions.	None reported	Any indication or report of impact or heat damage.
Environmental Damage or Weathering	Ultraviolet or other environmental attack under the exterior coating.	None	Any discoloration that can not be washed off. (See Note 2)
Damage to a protective or sacrificial layer	Abrasion, cuts, chemical attack, scratches/gouges, corrosion, environmental damage, or crazing that are limited only to the protective or sacrificial layer.	The depth of any damage to the protective or sacrificial layer that does not exceed the thickness of the protective or sacrificial layer plus 1.3 mm.	The depth of any damage to the protective or sacrificial layer that exceeds the thickness of the protective or sacrificial layer plus1.3 mm.
Crazing	Hairline surface cracks only in the composite resin.	Light hairline cracks only in the resin.	Any damage to the filaments.

Note 1:

Only damage beyond the sacrificial or coated layer should be considered, and that any damage to sacrificial or coated layers should be repaired by suitable techniques (e.g., epoxy filler). Refer to Manufacturer's Data Report for sacrificial layer thickness.

Note 2:

Washing off UV scale will accelerate attack into lower composite layers.. For this reason, if there is superficial UV damage the affected area should be cleaned and painted with a UV tolerant paint. If broken, frayed, or separated fibers to the non sacrificial layer greater than a depth of 1.3 mm, are discovered during the cleaning process then the vessel shall be condemned.

S10.8 EXTERNAL INSPECTION

a) Vessel Service Life

Vessels have been designed and manufactured for a limited lifetime; this is indicated on the vessel

marking. This marking shall first be checked to ensure that such vessels are within their designated service lifetime.

b) Identification of External Damage

The external surface shall be inspected for damage to the laminate. Damage is classified into two levels as shown in Table S10.7-a or Table S10.7-b of this supplement. The acceptance/rejection criteria shown in Table S10.7-a or Table S10.7-b of this supplement shall be followed, as a minimum.

The external surface of the vessel is subject to mechanical, thermal, and environmental damage. The external surface of a vessel may show damage from impacts, gouging, abrasion, scratching, temperature excursions, etc. Areas of the surface that are exposed to sunlight may be degraded by ultraviolet light which results in change in the color of the surface and may make the fibers more visible. This discoloration does not indicate a loss in physical properties of the fibers. Overheating may also cause a change in color. The size (area or length and depth) and location of all external damage shall be noted. Vessel support structures and attachments shall be examined for damage such as cracks, deformation, or structural failure.

c) Types of External Damage

1) General

Several types of damage to the exterior of vessels have been identified. Examples of specific type of damage are described below. The acceptance/rejection criteria for each type of damage are described in Table S10.7-a or Table S10.7-b of this supplement.

2) Abrasion Damage

Abrasion damage is caused by grinding or rubbing away of the exterior of the vessel. Minor abrasion damage to the protective outer coating or paint will not reduce the structural integrity of the vessel. Abrasion that results in flat spots on the surface of the vessel may indicate loss of composite fiber overwrap thickness.

3) Damage from Cuts

Cuts or gouges are caused by contact with sharp objects in such a way as to cut into the composite overwrap, reducing its thickness at that point.

4) Impact Damage

Impact damage may appear as hairline cracks in the resin, delamination, or cuts of the composite fiber overwrap.

5) Delamination

Delamination is a separation of layers of fibers of the composite overwrap due to impact or excessive localized loading. It may also appear as a discoloration or a blister beneath the surface of the fiber.

Note: This does not apply to layers intentionally separated by the manufacturer.

6) Heat or Fire Damage

Heat or fire damage may be evident by discoloration, charring or burning of the composite fiber overwrap, labels, or paint. If there is any suspicion of damage, the vessel shall be qualified fit for service using an acoustic emission examination.

7) Structural Damage

Structural damage will be evidenced by bulging, distortion, or depressions on the surface of the vessel.

8) Chemical Attack

Some chemicals are known to cause damage to composite materials. Environmental exposure or direct contact with solvents, acids, bases, alcohols, and general corrosives can cause damage to vessels. Long-term contact with water can also contribute to corrosive damage, although may not be a problem by itself. Chemicals can dissolve, corrode, remove, or destroy vessel materials. Chemical attack can result in a significant loss of strength in the composite material. Chemical attack can appear as discoloration and in more extreme cases the composite overwrap can feel soft when touched. If there is any suspicion of damage, the vessel shall be re-qualified using acoustic emission examination.

S10.9 INTERNAL EXAMINATION

a) Requirements for Internal Visual Examination

Internal visual examination is normally not required. When vessels have been filled only with pure fluids, corrosion of the interior of the liner should not occur. Internal visual examination of the tanks shall only be carried out when:

1) There is evidence that any commodity except a pure fluid has been introduced into the tank. In particular, any evidence that water, moisture, compressor cleaning solvents, or other corrosive agents have been introduced into the vessel shall require an internal visual examination.

2) There is evidence of structural damage to the vessel, such as denting or bulging.

3) The vessel valve is removed for maintenance or other reason. Internal examination in this case is limited to examination of the threads and sealing surface. When an internal visual examination is conducted, the following procedures shall be followed.

b) Identification of Internal Damage

1) Vessels with Metallic Liners

For vessels with metallic liners, the objective of the internal visual examination is primarily to detect the presence of any corrosion or corrosion cracks.

The internal surface of the vessel shall be examined with adequate illumination to identify any degradation or defects present. Any foreign matter or corrosion products shall be removed from the interior of the vessel to facilitate inspection. Any chemical solutions used in the interior of the vessel shall be selected to ensure that they do not adversely affect the liner or composite overwrap materials. After cleaning the vessel shall be thoroughly dried before it is examined.

All interior surfaces of the vessel shall be examined for any color differences, stains, wetness, roughness, or cracks. The location of any degradation shall be noted.

Any vessel showing significant internal corrosion, dents or cracks shall be removed from service.

2) Vessels with Non-metallic Liners or No Liners

Vessels with non-metallic liners may show corrosion on the plastic liner or metal boss ends. Vessels with non-metallic liners or no liners may also show internal degradation in the form of cracks, pitting, exposed laminate, or porosity.

The internal surface of vessels shall be examined with adequate illumination to identify any degradation or defects present. Any foreign matter or corrosion products shall be removed from the interior of the vessel to facilitate examination. Chemical solutions used in the interior of the vessel shall be selected to ensure they do not adversely affect the liner or composite overwrap materials. After cleaning the vessel shall be thoroughly dried before it is examined.

c) The Inspector shall look for cracks, porosity, indentations, exposed fibers, blisters, and any other indication of degradation of the liner and/or laminate. Deterioration of the liner may include softening of the matrix or exposed fibers.

S10.10 ACOUSTIC EMISSION EXAMINATION

S10.10.1 USE AND TEST OBJECTIVES

All high-pressure composite pressure vessels shall be subject to an acoustic emission (AE) examination to detect damage that may occur while the vessel is in service. This method may be used in conjunction with the normal filling procedure.

S10.10.2 AE TECHNICIAN REQUIREMENTS

The acoustic emission technician conducting the examination required per S10.10.1 and in accordance with S10.10 shall be certified per the guidelines of ASNT SNT-TC-1A or CP-189 AE Level II or III. A technician performing this test shall have training in and experience with measuring C_e and C_f in composites and identifying wave modes.

S10.10.3 TEST PROCEDURE

AE transducers shall be acoustically coupled to the vessel under test and connected to waveform recording equipment. Waveforms shall be recorded and stored on digital media as the vessel is pressurized. All analysis shall be done on the waveforms. The waveforms of interest are the E (Extensional Mode) and F (Flexural Mode) plate waves.

Prior to pressurization, the velocities of the earliest arriving frequency in the E wave and the latest arriving frequency in the F wave shall be measured in the circumferential direction in order to characterize the material and set the sample time (the length of the wave window).

The E and F waves shall be digitized and stored for analysis. The test pressure shall be recorded simultaneously with the AE events. Permanent storage of the waveforms is required for the life of the vessel.

S10.10.4 EQUIPMENT

a) Testing System

A testing system shall consist of:

1) sensors;

2) preamplifiers;

3) high pass and low pass filters;

4) amplifier;

5) A/D (analog-to-digital) converters;

6) a computer program for the collection of data;

7) computer and monitor for the display of data; and

8) a computer program for analysis of data.

Examination of the waveforms event by event shall always be possible and the waveforms for each event shall correspond precisely with the pressure and time data during the test. The computer program shall be capable of detecting the first arrival channel. This is critical to the acceptance criteria below.

Sensors and recording equipment shall be checked for a current calibration sticker or a current certificate of calibration.

b) Sensor Calibration

Sensors shall have a flat frequency response from 50 kHz to 400 kHz. Deviation from flat response (signal coloration) shall be corrected by using a sensitivity curve obtained with a Michelson interferometer calibration system similar to the apparatus used by NIST (National Institute for Standards and Technology). Sensors shall have a diameter no greater than 0.5 in. (13 mm) for the active part of the sensor face. The aperture effect shall be taken into account. Sensor sensitivity shall be at least 0.1 V/nm.

c) Scaling Fiber Break Energy

The wave energy shall be computed by the formula:

$$u = \int v^2 \, dt/z$$

FIGURE S10.10.4-a
ROLLING BALL IMPACT CALIBRATION SETUP

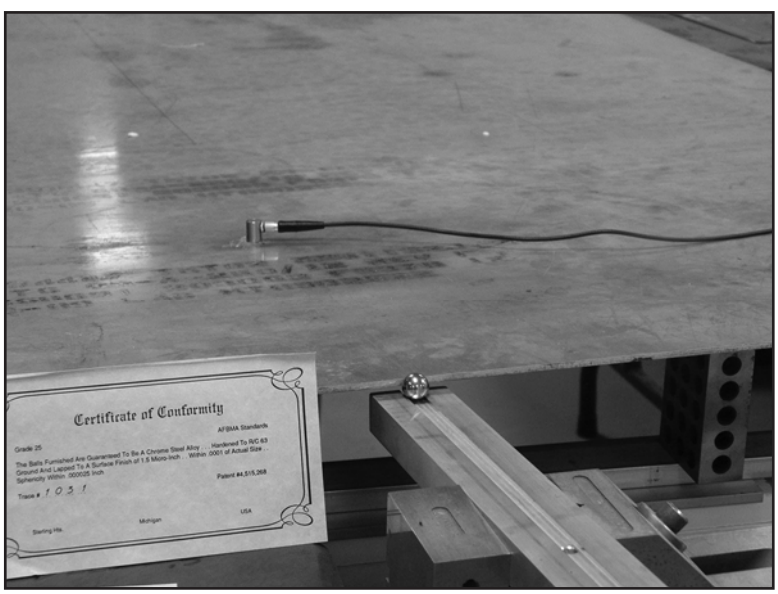

FIGURE S10.10.4-b
FRONT END WAVEFORM

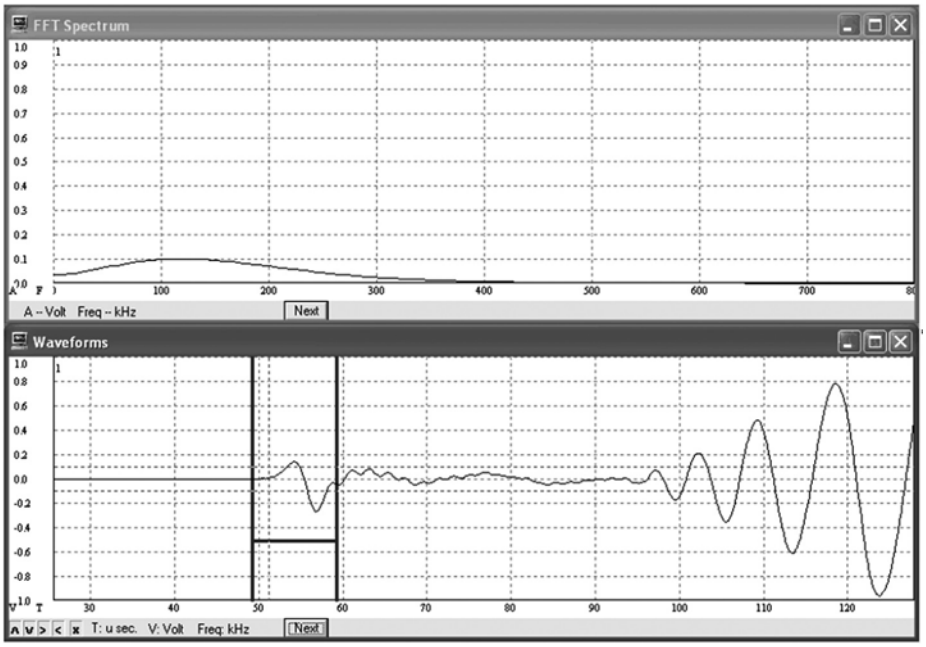

which is the formula for computing energy in the AE signal, where V is the voltage in volts (V) and Z is the input impedance in ohms (Ω). A rolling ball impactor shall be used to create an acoustical impulse in an aluminum plate. The measured energy in the wave shall be used to scale the fiber break energy. This scaling is illustrated later on.

The impact setup, an example of which is shown in Figure S10.10.4-a, shall be arranged as follows. The steel ball shall be ½ inch (13 mm) in diameter. The steel ball is a type typically used in machine shops for measuring taper and is commercially available. The ball shall be made of chrome steel alloy hardened to R/C 63, ground and lapped to a surface finish of 1.5 micro-inch (0.0000381 mm), within 0.0001 inch (0.0025 mm) of actual size and sphericity within 0.000025 inch (0.00064 mm). The plate shall be made of 7075 T6 aluminum, be at least 4 ft x 4 ft (1200 mm X 1200 mm) in size, the larger the better to avoid reflections, be 1/8 inch (3.2 mm) in thickness and be simply supported by steel blocks. The inclined plane shall be aluminum with a machined square groove 3/8 inch (9.5 mm) wide which supports the ball and guides it to the impact point. The top surface of the inclined plane shall be positioned next to the edge of the plate and stationed below the lower edge of the plate such that the ball impacts with equal parts of the ball projecting above and below the plane of the plate. A mechanical release mechanism shall be used to release the ball down the plane.

The ball roll length shall be 12 inch (305 mm) and the inclined plane angle shall be 6 degrees. The impact produces an impulse that propagates to sensors coupled to the surface of the plate 12 inches (305 mm) away from the edge. The sensors shall be coupled to the plate with vacuum grease. The energy of the leading edge of the impulse, known as the wave front, shall be measured. The vertical position of the ball impact point shall be adjusted gradually in order to “peak up” the acoustical signal, much as is done in ultrasonic testing where the angle is varied slightly to peak up the response. The center frequency of the first cycle of the E wave shall be confirmed as 125 kHz ± 10 kHz. See Figure S10.10.4-b. The energy value in joules of the first half cycle of the E wave shall be used to scale the fiber break energy in criterion 2, as illustrated there. This shall be an “end to end” calibration, meaning that the energy shall be measured using the complete AE instrumentation (sensor, cables, preamplifiers, amplifiers, filters and digitizer) that are to be used in the actual testing situation.

Front end of waveform created by rolling ball impact calibration setup described herein. Fast Fourier transform (FFT) shows center frequency of first cycle is approximately 125kHz. The energy linearity of the complete AE instrumentation (sensor, cables, preamplifiers, amplifiers, filters and digitizer) shall be measured by using different roll lengths of 8, 12 and 16 inches (203, 305, and 406 mm). The start of the E wave shall be from the first cycle of the waveform recognizable as the front end of the E wave to the end of the E wave which shall be taken as 10 microsecond (μs) later. (The time was calculated from the dispersion curves for the specified aluminum plate.) A linear regression shall be applied to the energy data and a goodness of fit $R^2 > 0.9$ shall be obtained.

d) Preamplifiers and Amplifiers - See ASME Section V, Article 11.

e) Filters

A high pass filter of 20 kHz shall be used. A low pass filter shall be applied to prevent digital aliasing that occurs if frequencies higher than the Nyquist frequency (half the sampling rate) are in the signal.

f) A/D

The sampling speed and memory depth (wave window length) are dictated by the test requirements and calculated as follows: Vessel length = L inches (meters). Use C_E = 0.2 in./μs (5080 m/s) and C_F = 0.05 in./μs (1270 m/s), the speeds of the first arriving frequency in the E wave and last arriving frequency in the F wave, respectively, as a guide. The actual dispersion curves for the material shall be used if available.

L / C_E = T1 μs. This is when the first part of the direct E wave will arrive.

L / C_F = T2 μs. This is when the last part of the direct F wave will arrive.

(T2 – T1) x.1.5 is the minimum waveform window time and allows for pretrigger time.

The recording shall be quiescent before front end of the E wave arrives. This is called a “clean front end”. Clean is defined in S10.10.6 b) 2) below.

The sampling rate, or sampling speed, shall be such that aliasing does not occur.

The recording system (consisting of all amplifiers, filters and digitizers beyond the sensor) shall be calibrated by using a 20 cycle long tone burst with 0.1 V amplitude at 100, 200, 300, and 400 kHz. The system shall display an energy of $uu = \frac{vv^{!}\ NNNN}{ZZZ}$ joules at each frequency, where V=0.1 volts, N = 20, Z is the preamplifier input impedance in ohms (Ω) and T is the period of the cycle in seconds (s).

S10.10.5 SENSOR PLACEMENT

At least two sensors shall be used in any AE test regardless of vessel size so that electromagnetic interference (EMI) is easily detected by simultaneity of arrival. Sensors shall be placed at equal distances around the circumference of the vessel on the cylindrical portion of the vessel adjacent to the tangent point of the dome such that the distance between sensors does not exceed the greater of 24 in. (610 mm), or the effective sensing distance established by signal meaurement. Adjacent rings of sensors shall be offset by ½ a cycle. For example, if the first ring of sensors is placed at 0, 120, and 240 degrees, the second ring of sensors is placed at 60, 180, and 300 degrees. This pattern shall be continued along the vessel length at evenly spaced intervals, such intervals not to exceed the greater of 24 in. (610 mm), or the effective sensing distance established by signal measurement, until the other end of the vessel is reached. See Figure S10.10.4. The diameter referred to is the external diameter of a vessel.

Maximum distance between sensors in the axial and circumferential directions shall not exceed 24 inches (609 mm) unless it is demonstrated that the essential data can still be obtained using a greater distance and the authority having the jurisdiction concurs.

This spacing allows for capturing the higher frequency components of the acoustic emission impulses and high channel count wave recording systems are readily available.

FIGURE S10.10.5
SENSOR SPACING AND PATTERN

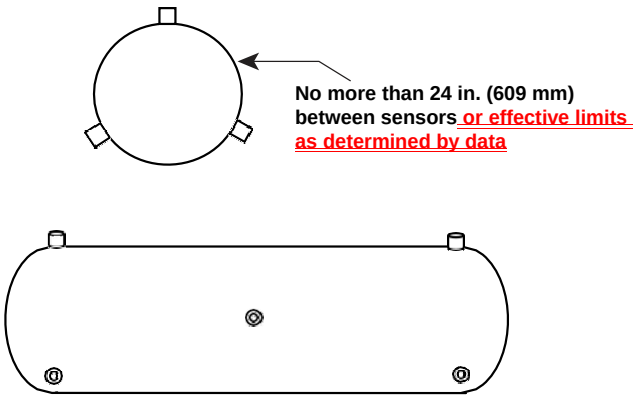

S10.10.6 TEST PROCEDURE

Couple sensors to vessel and connect to the testing equipment per ASME Section V Article 11. Connect pressure transducer to the recorder. Conduct sensor performance checks prior to test to verify proper operation and good coupling to the vessel. The E and F waveforms shall be observed by breaking pencil lead at approximately 8 in. (200 mm) and 16 in. (410 mm) from a sensor along the fiber direction. All calibration data shall be recorded.

Recording threshold shall be 60 dB ref 1 μV at the transducer.

Performance checks shall be carried out by pencil lead breaks (Pentel 0.3 mm, 2H) six inches (150 mm) from each transducer in the axial direction of the cylinder and a break at the center of each group of four sensors.

Pressurize vessel to >98% of normal fill pressure and monitor AE during pressurization and for 15 minutes after fill pressure is reached. See Figure S10.10.5 for a schematic of the pressurization scheme. If at any time during fill the fill rate is too high in that it causes flow noise, decrease fill rate until flow noise disappears. Record events during pressurization and for 15 minutes after fill pressure is reached and save the data. Then conduct a post-test performance check and save data. Test temperature shall be between 50°F (10°C) and 120°F (49°C).

A threshold of 60 dBAE ref 1 μV at the sensor shall be used during all phases of testing.

FIGURE S10.10.6
TYPICAL PRESSURIZATION PLAN WHEN FILLING VESSELS

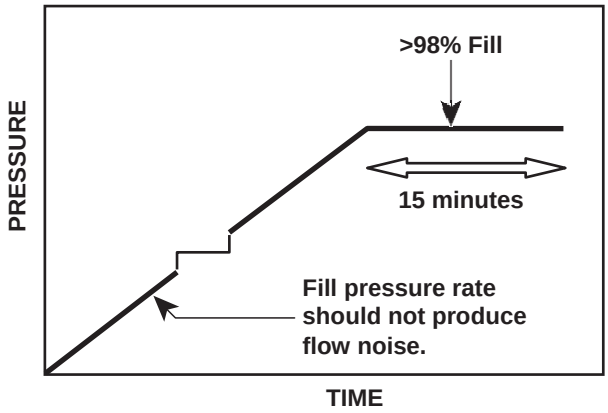

AE shall be monitored for 15 min after operating fill pressure is reached.

S10.10.7 ACCEPT/REJECT CRITERIA

a) Stability Criterion

Theory of AE Monitoring of high-pressure composite pressure vessels for stability– A stable vessel will exhibit cumulative curves with exponentially decaying curvature. The shape of the cumulative events curve is similar for pressure vessels made of fiberglass, aramid and carbon fiber that exhibit a fiber dominated failure mode. This is essentially a test that demonstrates the composite is not progressing to failure at the hold pressure.

b) Analysis Procedure

Data will include matrix splits, matrix cracks, fiber breaks, and matrix chirps due to fracture surface fretting, and fiber/matrix debonding. Extraneous noise, identified by waveform characteristics, may also be included in the data.

1) Filter data to eliminate any external noise such as electromagnetic interference (EMI), mechanical rubbing, flow noise, etc. Identify noise events by their shape, spectral characteristics, or other information known about the test such as a temporally associated disturbance due to the pressurization system or test fixturing. EMI is characterized by a lack of any mechanical wave propagation characteristics, particularly a lack of dispersion being apparent. EMI can be further identified by simultaneity of arrival on more than one channel. The two criteria shall be considered together to ensure it's not simply an event that happened to be centered between the sensors. Mechanical rubbing frequencies are usually very low and can be determined by experiment. There should be no flow noise. If the vessel, or a fitting, leaks, this will compromise the data as AE is very sensitive to leaks. Leak noise is characterized by waves that look uniform across the entire length of the waveform window. If a leak occurs during the load hold, the test must be redone. Flow noise is characterized by waves that fill the waveform window.

2) Use only events that have clean front ends and in which first arrival channel can be determined. Clean means having a pre-trigger energy of less than 0.01×10^{-10} joules. Energy is computed by the integral of the voltage squared over time.

3) Plot first arrival cumulative events versus time. Plots shall always show the pressure data.

4) Apply exponential fits by channel for pressure hold time and display both data and fit. The values are determined by the fit $y = ae^{Bt} + C$.

   The B value is the shape factor of the cumulative curves. C is an intercept and A is a scale factor. The time t shall be equal intervals during the hold with events binned by time interval. Record exponents and goodness of fit (R^2). Plot energy decay curves. One third or one fourth of hold time shall be used for event energy binning (cumulative energy). The formula is $y = ae^{Bt}$.

   The sequence of energy values must monotonically decrease.

   This is similar to using other energy criteria, such as Historic Index. A sequence that is not properly decreasing will be indicated by a low R^2 value.

5) Save all plots (all channels) to report document.

6) Record exponents and R^2 values.

7) Vessel B Values

   a. Vessel B values shall be tracked and compiled in order to develop a statistically significant database.

   b. B is the critical value that measures the frequency of occurrence of events during pressure hold.

   c. Not every vessel will have the exact same B value.

   d. Data on B values should cluster.

S10.10.7.1 THE CRITERIA GIVEN BELOW APPLY TO EACH INDIVIDUAL SENSOR ON THE VESSEL

a) The stability criteria as described above shall be met. (Also see ASME Section X Mandatory Appendix 8.) Any vessel that does not meet the stability criteria must be removed from service. The criteria are:

   1) Cumulative Event Decay Rate $-0.1 < B < -0.0001$, $R^2 \geq 0.80$

   2) Cumulative Energy Decay Rate $-0.2 < B < -0.001$, $R^2 \geq 0.80$

   If these criteria are not met, the vessel does not pass. The vessel may be retested. An AE Level III examiner must review the data from the initial testing and the subsequent loading test before the vessel can be passed. Retest loadings shall follow the original pressurization rates and pressures and use a threshold of 60 dBAE. If the vessel fails the criteria again, the vessel shall not be certified by the Inspector as meeting the provisions of this section.

b) Events that occur at the higher loads during pressurization having significant energy in the frequency band f > 300 kHz are due to fiber bundle, or partial bundle, breaks. These should not be present at operating pressure in a vessel that has been tested to a much higher pressures and is now operated at the much lower service pressure. For fiber bundles to break in the upper twenty percent of load during the test cycle or while holding at operating pressure, the vessel has a severe stress concentration and shall be removed from service.

S10.10.8 FIBER BREAKAGE CRITERION

a) Analysis Procedure

   In order to determine if fiber bundle breakage has occurred during the filling operation the frequency

spectra of the direct E and F waves shall be examined and the energies in certain frequency ranges shall be computed as given below.

b) Definitions

Energies (U) in the ranges are defined as:

50 – 400 kHz: U_0

100 – 200 kHz: U_1

250 – 400 kHz: U_2

The criteria for determining if high frequency spectrum events have occurred is given by the following formulas:

$U_0/(UF_{BB)} \geq 10\%$

$U_2 / (U_1 + U_2) \geq 15\%$

$U_2 / U_0 \geq 10\%$

U_{FBB} is the energy of a fiber bundle break calculated using the average breaking strength from the manufacturer's data or independent test data. The manufacturer's data shall be used if available. The formula that shall be used for calculating average fiber break energy in joules (J) is

$$UU_{!\cdot\cdot} = \frac{EE * AA * ll * \varepsilon\varepsilon^{!}}{2}$$

where E is the Young's modulus of the fiber in pascals (Pa), ε is the strain to failure of the fiber, A is area of the fiber in square meters (m^2), and l is the ineffective fiber length in meters (m) for the fiber and matrix combination. If the ineffective length is not readily available, four times the fiber diameter shall be used. Set $U_{FBB} = 100 \times U_{FB}$, where U_{FB} has been calculated and scaled by the rolling ball impact energy as in the examples below. If these criteria are met, fiber bundle break damage has occurred during the test and the vessel shall be removed from service.

c) Example of Fiber Break Energy Calculation Suppose d = 7 μm, *E* = 69.6 GPa and ε = 0.01 (average breaking strain) for some carbon fiber. Using $A = \pi d^2/4$ and / = 4d,

$$UU_{!\cdot\cdot} = \frac{EE * AA * ll * \varepsilon\varepsilon^{!}}{2}$$

$$UU_{!\cdot\cdot} = \frac{EE69.6 * 10^{!}\,PPPP * \pi\pi * \frac{(7 * 10^{!!}mm)^{!}}{4} * 2.8 * 10^{!!}mm * (0.01)^{!}}{2}$$

$$UU_{!\cdot\cdot} = 3.75 * 10^{!!}jj$$

d) Example of Scaling Calculation

Suppose that the rolling ball impact (RBI) acoustical energy measured by a particular high fidelity AE transducer is $U^{AE}_{RBI} = 5 \times 10^{-10}$ J and the impact energy $U_{RBI} = 1.9 \times 10^{-3}$ J (due to gravity). Suppose d = 7 μm, *E* = 69.6 GPa and ε = 0.01 (average breaking strain) for some carbon fiber. Using $A = \pi d^2/4$ and l = 4d, $U_{FB} = 3\times10^{-8}$ J. A carbon fiber with a break energy of $U_{FB} = 3\times10^{-8}$ J would correspond to a wave energy.

$$U^{AE}{}_{FB} = U_{FB} \times U_{AE_{RBI}} / U_{RBI}$$

$$U^{AE}{}_{FB} = 3\text{x}10^{-8}\text{J} \times 5 \times 10^{-10}\ \text{J} / 1.9 \times 10^{-3}\ \text{J}$$

$$U^{AE}{}_{FB} = 7.9 \times 10^{-15}\ \text{J}.$$

This is the number that is used to calculate the value of U_{FBB} that is used in the fiber break criterion in the second acceptance criterion and the energy acceptance criterion in the third criterion below.

e) Amplifier Gain Correction

All energies shall be corrected for gain. (20 dB gain increases apparent energy 100 times and 40 dB gain 10,000 times.)

Fiber break waves may look similar to matrix event waves in time space but in frequency space the difference is clear. A fiber break is a very fast source, while a matrix crack evolves much more slowly due to greater than ten to one difference in their tensile moduli. The speed of the fiber break produces the high frequencies, much higher than a matrix crack event can produce. Frequencies higher than 2 MHz have been observed in proximity to a fiber break, however these very high frequencies are attenuated rapidly as the wave propagates. Practically speaking, the observation of frequencies above 300 kHz, combined with certain other characteristics of the frequency spectrum and pressure level, is enough to confirm a fiber break. It should also be noted that it is fiber bundle breaks that are usually detected in structural testing and not the breaking of individual fibers. The energies of individual fiber breaks are very small, about $3\text{x}10^{-8}$ Joules for T-300 carbon fibers for example.

S10.10.9 FRICTION BETWEEN FRACTURE SURFACES

Friction between fracture surfaces plays a very important role in understanding AE in fatigue testing. It is an indicator of the presence of damage because it is produced by the frictional rubbing between existing and newly created fracture surfaces. Even the presence of fiber bundle breakage can be detected by examining the waveforms produced by frictional acoustic emission or FRAE. Increasing FRAE intensity throughout a pressure cycle means more and more damage has occurred.

Therefore, for a vessel to be acceptable no AE event shall have an energy greater than (F) x U_{FB} at anytime during the test. F is the acoustic emission allowance factor. The smaller the allowance factor, the more conservative the test. An F = 10^4 shall be used in this testing. It is the equivalent of three plus fiber tows, each tow consisting of 3,000 fibers, breaking simultaneously near a given transducer.

S10.10.10 BACKGROUND ENERGY

Background energy of any channel shall not exceed 10 times the quiescent background energy of that channel. After fill pressure is reached, any oscillation in background energy with a factor of two excursions between minima and maxima shows that the vessel is struggling to handle the pressure. Pressure shall be reduced immediately and the vessel removed from service.

S10.11 DOCUMENT RETENTION

a) The vessel owner shall retain a copy of the Manufacturer's Data Report for the life of the vessel.

b) After satisfactory completion of the periodic in-service inspection, vessels shall be permanently marked or labeled with date of the inspection, signature of the Inspector, and date of the next periodic in-service inspection.

c) The vessel owner shall retain a copy of the in-service inspection report for the life of the vessel.

Supplement 14
Life Extension of High Pressure Fiber Reinforced Plastic Pressure Vessels

S14.1 Scope

This document may be used to evaluate whether the service life of high pressure fiber reinforced plastic pressure vessels (FRP) can be extended for an additional lifetime. High pressure means vessels with a working pressure from 3,000 psi (20 MPa) to 15,000 psi (103 MPa). For vessels intended for cyclic service, fatigue testing of new vessels is carried out by the vessel manufacturer to be certain that the vessel will not fail in service and such testing is typically required by regulatory authorities. Fatigue design and testing is the starting point for consideration of life extension.

S14.2 General

a) The procedure for in-service testing of high pressure composite pressure vessels, **Supplement 10** herein, is incorporated by reference into this procedure for life extension of high pressure composite pressure vessels. Supplement 10 is based on acoustic emission (AE) testing, specifically modal AE (MAE) testing. The MAE inspection procedure employs detection and analysis techniques similar to those found in seismology and SONAR. Much as with earthquakes, transient acoustical impulses arise in a composite material due to the motion of sources such as the rupture of fibers. These transients propagate as waves through the material and, if properly measured and analyzed by the methods in Supplement 10, the captured waves reveal, for example, how many fibers have ruptured. Similar information about other sources is also determinable, such as the presence and size of delaminations. Delaminations can play a significant role in vessel fatigue life, particularly delaminations near the transition regions and in the heads. The rupture behavior can be used to determine the integrity of the vessel. However, the development of criteria for life extension (LE) requires an understanding of the vessel design and fatigue life.

b) Fatigue testing of out of life vessels is a crucial part of the life extension process. It is used to validate the mechanical behavior of the vessels and to develop the numerical values for the allowables in the MAE pass/fail criteria for the particular design, material and construction.

S 14.3 Life Extension Procedure

a) New vessel fatigue life testing data shall be obtained from the Manufacturer's Design Report (MDR) and the number of cycles in a lifetime shall be determined from the MDR. The type of vessel under consideration for life extension shall have been shown through testing to be capable of sustaining at least three lifetimes of cycles to developed fill pressure followed by a subsequent burst test at a pressure greater than minimum design burst pressure.

b) An evaluation of the service the vessel has seen should take into account any operational conditions that may have differed from those used in the design testing and analysis. Such conditions include for example exposure to more severe weather than expected, more cycles

per year, constant high temperature and humidity, chemical attack or any other of a number of conditions under which operations take place that were not specifically included in testing at manufacture. Any such conditions shall be listed on the attached form. If no such conditions exist, it shall be so noted on the form. The test program delineated herein shall be revised to reflect the modified conditions as documented by the user and submitted for approval to the proper authorities.

c) Data and records for all vessels considered for life extension shall be kept and made readily available to inspectors or examination personnel. This includes an operating log, number of operating cycles since the previous examination, total number of operating cycles, examinations, examination techniques and results, maximum operating pressure and any unexpected pressures, temperatures, temperature cycles, damage events or other significant events that were outside the intended operating parameters or conditions.

d) A life extension test program shall be carried out for each type of vessel under consideration. Type of vessel means the particular manufacturer, materials (fiber and resin), water volume and design. If the type of vessel passes all requirements, then that type shall be eligible for life extension testing. If such a vessel passes the life extension MAE test its lifetime can be extended for one additional lifetime in five-year increments. In order to maintain life extension a vessel must be requalified every five years using the MAE test.

S14.4 Life Extension Test Program

a) The type of vessel under consideration for LE shall be noted. Manufacturer, place of manufacture and manufacturing date shall be recorded. The vessel dimensions shall be recorded. The specific fiber, matrix and winding pattern shall be recorded. If the fiber, matrix and winding pattern are not available from the manufacturer, then a vessel of the type under consideration shall be used to verify the winding pattern (hoop and helical angles and number of plies) through destructive testing.

b) Ten out-of-life vessels of the particular type shall be tested in the manner described herein. MAE techniques shall be applied to every vessel tested. Analysis of the MAE data is described herein. Two strain gages, one in the 0-degree and one in the 90-degree direction, shall be applied to every vessel pressure tested under this program. The purpose of strain gage data is to compute the 0 and 90 modulus values and to confirm that the modulus values of the material do not vary during the fatigue cycling required herein. Strain data shall be recorded and analyzed as described later on.

c) The LE test program proceeds by Steps. If the Step 1 is not successful, then there is no need to proceed to Step 2, and so forth.

S14.5 Life Extension Test Program Steps

S14.5.1 Step 1

Three vessels shall be selected from the ten and pressurized to burst. The vessels shall be inspected for visible damage, i.e., cuts, scrapes, discolored areas, and the vessel appearance shall be documented with photographs. MAE testing shall be done in conjunction with this testing as specified in Supplement 10, except for transducer spacing, pressurization plan and accept/reject criteria values. The values in Supplement 10 are for requalification testing. The transducer spacing shall be determined by the distance at which the 400 kHz component of a suitable pulser source is detectable along the axis of the vessel (essentially across the hoop fibers) and in the perpendicular direction (essentially parallel to the hoop fibers). Detectable means that the resulting signal component has an amplitude with at least a signal to noise ratio of 1.4. Transducer frequency response calibration and energy scale shall be carried out as specified in SUPPLEMENT 10. The pressurization plan shall follow that in ASME Section X Mandatory Appendix 8, i.e., there shall be two pressure cycles to test pressure with holds at test pressure as prescribed therein, however, the time interval between the two cycles may be reduced to one minute. For the purposes of life extension, the fiber fracture energy and BEO (background energy oscillation) values shall be as specified below.

a) No BEO greater than 2 times the quiescent energy (see Supplement 10) shall be observed up to test pressure or during pressure holds.

b) No fiber break event energy shall be greater than $24 \times 10^3 \times U_{FB}$ (see Supplement 10) during the second pressurization cycle.

c) No single event shall have an energy greater than $24 \times 10^5 \times U_{FB}$ during the second pressurization cycle.

Note: The numerical values specified in b) and c) can be adjusted through documented testing and stress analysis methods in order to account for the particular design, material and construction.

d) At least two sensors shall remain on each vessel all the way to burst in order to establish the BEO pressure for this type of vessel.

e) Plots of stress versus strain shall show linear behavior up to 90% of burst pressure.

f) The burst pressures of all three vessels shall be greater than the minimum design burst pressure.

g) If the burst pressure of any one of the three vessels is not greater than the minimum design burst pressure, then these vessels shall not be eligible for life extension and there is no need to proceed with Step 2 below.

Note: It is possible that one or more of the vessels selected had damage not obvious to visual inspection. If during this burst testing phase the MAE test identifies a vessel as damaged, the substitution of three other randomly selected vessels is allowed.

S14.5.2 Step 2

If the vessels pass Step 1, fatigue testing shall be carried out on a minimum of three vessels of the same type being considered for life extension.

a) Prior to testing, the vessels shall be inspected for visible damage, i.e., cuts, scrapes, discolored areas, and the vessel appearance shall be documented with photographs.

b) Prior to fatigue testing, MAE testing as specified in Step 1 shall be done in conjunction with the fatigue testing, hereinafter called the MAE test or MAE testing, in order to determine the suitability of the vessels for fatigue testing, i.e., that they pass the MAE test.

c) Next, the vessels shall be subjected to fatigue cycles. Pressure shall be 100 psi +0, -50% to at least 1.05 x working pressure. Vessels shall survive one and one-half (1.5) additional lifetimes. If they survive then they shall be tested by an MAE test as was done prior to fatigue cycling.

d) Provided they pass the MAE test, they shall be burst tested. At least two sensors shall remain on each vessel all the way to burst in order to establish that the BEO (background energy oscillation) pressure for the fatigued vessels is consistent, i.e., is the same percentage of ultimate, with that of the vessels tested in Step 1.

e) Plots of stress versus strain shall show linear behavior up to 90% of burst pressure.

f) The burst pressures at the end of the fatigue testing shall be greater than or equal to the minimum design burst. If the burst pressure of any one of the three vessels is not greater than the minimum design burst pressure, then these vessels shall not be eligible for life extension.

S14.5.3 Step 3

If the vessels pass Step 2, impact testing shall be carried out on a minimum of three vessels of the same type being considered for life extension.

a) Prior to testing, the vessels shall be inspected for visible damage, i.e., cuts, scrapes, discolored areas, and the vessel appearance shall be documented with photographs. Prior to impact testing, MAE testing shall be done in order to determine the suitability of the vessels for impact testing, i.e., that they pass the MAE test.

b) Two vessels shall be subjected to an ISO 11119.2 drop test and then subjected to the MAE test.
If they pass the MAE test, then one vessel shall be burst tested. At least two sensors shall remain on the vessel all the way to burst in order to establish that the BEO (background energy oscillation) pressure for the fatigued vessels is consistent, i.e., is the same percentage of ultimate, with that of the vessels tested in Step 1.

c) Plots of stress versus strain shall show linear behavior up to 90% of burst pressure.

d) If the burst pressure is not greater than the minimum design burst pressure, then these vessels shall not be eligible for life extension.

e) If the first vessel passes the burst test, the other dropped vessel shall be fatigue cycled and subsequently subjected to the MAE test and, if it passes, shall be burst tested under the same conditions as before. If the vessel fails during fatigue cycling, i.e., bursts or leaks, then these vessels shall not be eligible for life extension.

f) If the modulus changes by more than 10%, then these vessels shall not be eligible for life extension. The strain gages should be mounted in a location that is away from the impact zone.

g) The burst pressure at the end of the fatigue testing of the dropped vessel shall be greater than or equal to the minimum design burst. The vessels shall have MAE testing applied during burst testing as before and the BEO shall be consistent with the previously established percent of burst ±10%.

S14.5.4 Step 4

If the vessels pass Step 3, cut testing shall be carried out on a minimum of two vessels of the same type being considered for life extension.

a) Prior to testing, the vessels shall be inspected for visible damage, i.e., cuts, scrapes, discolored areas, and the vessel appearance shall be documented with photographs. Prior to cut testing, MAE testing shall be done in order to determine the suitability of the vessels for cut testing, i.e., that they pass the MAE test.

b) Two vessels shall be subjected to an ISO 11119.2 cut test and then subjected to the MAE test. If they pass, then one shall be burst tested under all the conditions and procedures delineated in Step 2. If the burst pressure is not greater than the minimum design burst pressure, then these vessels shall not be eligible for life extension.

c) If the cut vessel passes, then the other cut vessel shall be fatigue cycled as described in Step 2 and subsequently subjected to the MAE test and then burst tested with at least two MAE sensors remaining on and monitoring the vessel as before. If it does not survive fatigue cycling, then these vessels shall not be eligible for life extension.

d) The burst pressure at the end of the fatigue testing of the cut vessel shall be greater than or equal to the minimum burst pressure specified by ISO 11119.2.

If the vessel type passes Steps 1 to 4, then that type is eligible for life extension. An out of life vessel of the type subjected to the program above may have its life extended for one additional lifetime if it passes the MAE test. The vessel shall pass the MAE test at subsequent five-year intervals or at one-third of the lifetime, whichever is less, in order to continue in service. The vessel shall be labeled as having passed the NBIC life extension test.

Item 19-78

Subject: Detailed Requirements for Inservice Inspection of Cast Iron Boilers.

NBIC Location: Part 2, 2.2.12.1 a)

Explanation of Need: The only reference to cast iron material in ASME Section I is PMB-5.4 that allows heads or parts of miniature boilers, when not exposed to direct action of the fire, may be made of cast iron or malleable iron provided it complies with a specification permitted by Section I. Heads and parts do not make up the complete boiler. ASME Section VIII Div. 1, UCI-2 states that cast iron boilers shall not be used in direct firing applications or in unfired steam boilers.

Background Information: The language to include "or high" pressure steam was added in the 2007Ed/2007Add of the NBIC Part 2. Unfortunately, there are no historical records or interpretations supporting the need for the revision in 2007. Both the 2004/2006 and 2007/2007 NBIC paragraphs have been provided for reference.

Proposed Revision:

2.2.12.1 CAST-IRON BOILERS

a) Cast-iron boilers are used in a variety of applications to produce low pressure steam and hot-water heat.~~low or high pressure steam and hot-water heat.~~ Cast-iron boilers should only be used in applications that allow for nearly 100% return of condensate or water and are not typically used in process-type service. These boilers are designed to operate with minimum scale, mud, or sludge, which could occur if makeup water is added to this system.

- *Pressure relief devices* – all pressure relief devices should be connected to a closed, vented storage tank or blowdown tank and must be the type with a closed-bonnet, no manual lift lever and solid piped discharge to an appropriately vented receiver. If outdoor discharge is used, the following should be considered for discharge piping at the point of discharge.
  - Both thermal and chemical reactions (personnel hazard)
  - Combustible materials (fire hazard)
  - Surface drains (pollution and fire hazard)
  - Loop seal or rain cap on the discharge (keep both air and water out of the system)
  - Drip leg near device (prevent liquid collection)
  - Heat tracing for systems using high freeze point fluids (prevent blockage)

RB-5604 WASTE HEAT BOILERS

Waste heat boilers are usually of firetube or watertube type and obtain their heat from an external source or process in which a portion of the BTU's have been utilized. Generation of electrical energy is usually the primary application of waste heat boilers. The biggest disadvantage of this type of boiler is that it is not fired on the basis of load demand. Since the boiler does not have effective control over the amount of heat entering the boiler, there may be wide variations or fluctuations of metal temperatures. Waste process gasses are usually in a temperature range of 400°F (205°C) to 800°F (425°C), where combustion gasses of conventional fired boilers are at about 2000°F (1095°C). Special design considerations are made to compensate for lower combustion gas temperatures such as the use of finned high-efficiency heat absorbing tubes, and by slowing the velocity of gasses through the boiler.

Due to the unique design and material considerations of waste heat boilers, the following are common areas of inspection.

- *Corrosion* – chemicals in waste heat gasses may create corrosive conditions and react adversely when combined with normal gasses of combustion. Water or steam leakage can create localized corrosion. Extreme thermal cycling can cause cracks and leakage at joints.

- *Erosion* – typically waste heat flow is very low and erosion is not a problem, however, when waste heat is supplied from an internal combustion engine, exhaust gasses can be high enough to cause erosion.

- *Vibration* – in some process applications and all engine waste heat applications, the boiler may be subjected to high vibration stresses.

- *Acid attack* – in sulfuric acid processes refractory supports and steel casings are subject to acid attack. Piping, filters, heat exchangers, valves, fittings, and appurtenances are subject to corrosive attacks because these parts are not normally made of corrosion resistant materials.

- *Dry operation* – in certain applications waste heat boilers are operated without water. Care must be taken not to expose carbon steel material to temperatures in excess of 800°F (425°C) for prolonged periods. Carbides in the steel may precipitate to graphite at elevated temperatures.

RB-5605 CAST-IRON BOILERS

Cast-iron boilers are widely used in a variety of applications to produce low pressure steam and hot water heat. Cast-iron boilers should only be used in applications that allow for nearly 100% return of condensate or water, and are not typically used in process-type service. These boilers are designed to operate with minimum scale, mud, or sludge, which could occur if makeup water is added to this system.

b) Due to the unique design and material considerations of waste heat boilers, the following are common areas of inspection:

1) Corrosion — chemicals in waste heat gasses may create corrosive conditions and react adversely when combined with normal gasses of combustion. Water or steam leakage can create localized corrosion. Extreme thermal cycling can cause cracks and leakage at joints.

2) Erosion — typically waste heat flow is very low and erosion is not a problem. However, when waste heat is supplied from an internal combustion engine, exhaust gasses can be high enough to cause erosion.

3) Vibration — in some process applications and all engine waste heat applications, the boiler may be subjected to high vibration stresses.

4) Acid Attack — in sulfuric acid processes refractory supports and steel casings are subject to acid attack. Piping, filters, heat exchangers, valves, fittings, and appurtenances are subject to corrosive attacks because these parts are not normally made of corrosion resistant materials.

5) Dry Operation — in certain applications waste heat boilers are operated without water. Care must be taken not to expose carbon steel material to temperatures in excess of 800°F (427°C) for prolonged periods. Carbides in the steel may precipitate to graphite at elevated temperatures.

2.2.12.5 CAST-IRON BOILERS

a) Cast-iron boilers are used in a variety of applications to produce low or high pressure steam and hot water heat. Cast-iron boilers should only be used in applications that allow for nearly 100% return of condensate or water, and are not typically used in process-type service. These boilers are designed to operate with minimum scale, mud, or sludge, which could occur if makeup water is added to this system.

b) Due to the unique design and material considerations of cast-iron boilers, the following are common areas of inspection:

1) Scale and Sludge — since combustion occurs at or near the bottom, accumulation of scale or sludge close to the intense heat can cause overheating and lead to cracking.

2) Feedwater — makeup feedwater should not come in contact with hot surfaces. Supply should be connected to a return pipe for tempering.

3) Section Alignment — misalignment of sections can cause leakage. Leakage or corrosion between sections will not allow normal expansion and contraction that may cause cracking.

4) Tie Rods or Draw Rods — used to assemble the boiler and pull the sections together. These rods must not carry any stress and need to be loose, allowing for section growth during heat up. Expansion washers may be used and nuts should be just snugged allowing for expansion.

5) Push Nipple or Seal Area — corrosion or leakage is likely at the push nipple opening, usually caused by the push nipple being pushed into the seat crooked, warping due to overheating, tie rods too tight, and push nipple corrosion/erosion.

6) Corrosion — firesides of sections can corrode due to ambient moisture coupled with acidic flue gas deposits.

Item 19-80

Subject: Conflicting statements in Part 1 and Part 2 about boiler controls

NBIC Location: Part 2, 2.2.10.6 l) 1)

Explanation of Need: Requirements in this section need to be consistent with Part 1, 2.8.4 a) to avoid confusion.

Background Information:
2.8.4 PRESSURE CONTROL (From NBIC Part 1)
Each automatically fired steam boiler shall be protected from overpressure by two pressure operated controls.
a) Each individual steam boiler or each system of commonly connected steam boilers shall have a control that will cut off the fuel supply when the steam pressure reaches an operating limit, which shall be less than the maximum allowable working pressure.

2.2.10.6 CONTROLS (From NBIC Part 2)
l) Check that the following controls/devices are provided:
1) Each automatically fired steam boiler is protected from overpressure by not less than two pressure operated controls, one of which may be an operating control.

Proposed Revision:
l) Check that the following controls/devices are provided:

1) Each automatically fired steam boiler is protected from overpressure by not less than two pressure operated controls~~, one of which may be an operating control.~~.

When required by the code of construction or the jurisdiction, the high pressure limit control shall be of the manual reset type.

2) Each automatically fired hot-water boiler or hot-water boiler system is protected from over-temperature by not less than two temperature operating controls, one of which may be an operating control.

When required by the code of construction or the jurisdiction, the high temperature limit control shall be of the manual reset type.

3) Each hot-water boiler is fitted with a thermometer that will at all times, indicate the water temperature at or near the boiler outlet.

Action Item Request Form

CODE REVISIONS OR ADDITIONS

Request for Code revisions or additions shall provide the following:

a) Proposed Revisions or Additions

Current text is incomplete with respect to inspecting riveted joints for failure. This proposal suggests adding more text, found in historic inspection documents, to further assist and direct the field inspector for assessing the condition of a riveted joint.

Existing Text:

S2.10.7 LIMITATIONS

a) The maximum allowable working pressure shall be the lesser of that calculated in accordance with NBIC Part 2, S2.10, or the MAWP established by the original manufacturer.

b) The shell or drum of a boiler in which a "lap seam crack" extending parallel to the longitudinal joint and located either between or adjacent to rivet holes, when discovered along a longitudinal riveted joint for either butt or lap joint, shall be permanently discontinued for use under steam pressure, unless it is repaired with jurisdictional approval.

Provide a brief explanation of the need for the revision or addition.

The text covers cracks parallel to a longitudinal joint, but there is no text covering inspection of plate material around a rivet.

c) Background Information

Review of the NBIC shows that failure indicators of riveted seams have not been identified or itemized. This proposal addresses this oversite.

Referenced standards, related discussion follow proposed wording.

Proposed wording

S2.10.2.3 INSPECTION OF RIVETED SEAMS

A riveted joint in a vessel subjected to pressure may fail in a number of different ways, depending on the type and relative proportions of the joint. Methods of failure may be classified as follows:

a.) Rivets may shear off.
b.) The plate may tear along the centerline of the row of rivets.
c.) The plate may shear in front of the rivets.
d.) The plate may tear from the outer edge of the rivet hole to the caulking edge.
e.) The plate may crush in front of the rivets.

Figure S2.10.2.3 illustrates visual indicators of (c), (d), (e). Inspection shall visually inspect for cracked or stressed plate material along a riveted joint. Indications of failure shall be monitored or repaired, at the discretion of the jurisdiction.

FIGURE S2.10.2.3

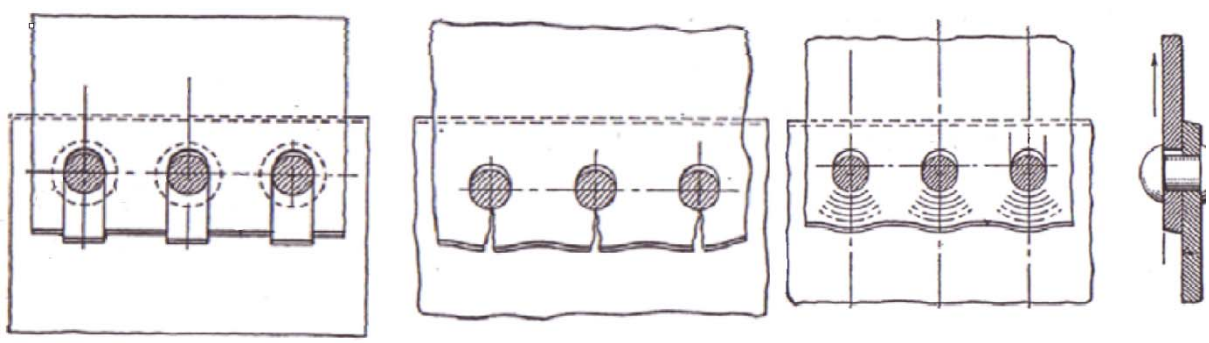

Note: Good engineering practice requires that the lap of plate outside rivet holes, measured from the outer edge of the rivet holes to the edge of the plate must be at least equal to the diameter of the rivet hole.

Referenced text:

Steam Boiler Design, Part 2, Great Britain, 1922:

20. Methods of Failure of Riveted Joint.—A riveted joint in a vessel subjected to pressure may fail in a number of different ways, depending on the type and relative proportions of the joint; but the simplest methods of failure may be illustrated by taking a single-riveted lap joint as an example. With such a joint, the methods of failure may be classified as follows:

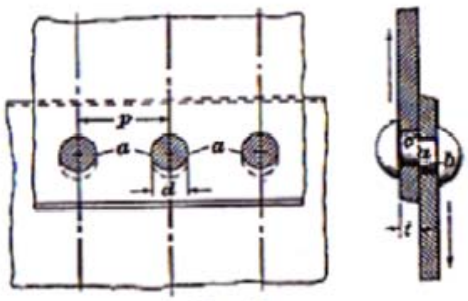

Fig. 19

1. The rivets may shear off, as shown in Fig. 19.

2. The plate may tear along the center line of the row of rivets, as shown in Fig. 20.

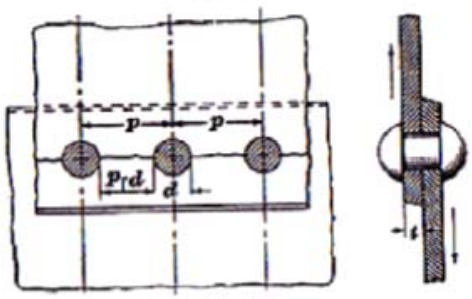

Fig. 20

3. The plate may crush in front of the rivets, as shown in Fig. 21.

4. The plate may shear in front of the rivets, as shown in Fig. 22 (*a*).

5. The plate may tear from the outer edge of the rivet hole to the calking edge, as shown in Fig. 22 (*b*).

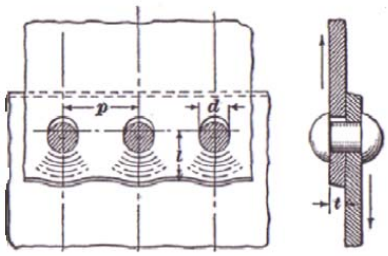

Fig. 21

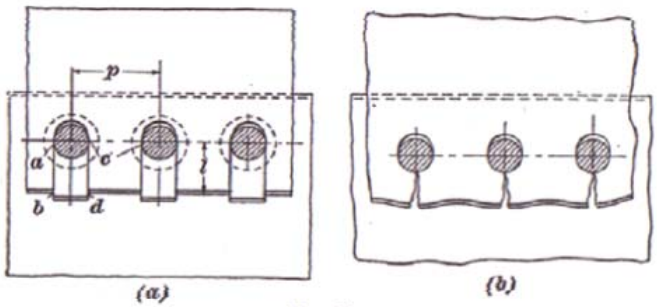

(*a*) (*b*)

Fig. 22

The provided Note is also important, because a design that does not adhere to this rule may need a different joint efficiency value than what is provided in TABLE S2.10.6. This rule has existed but is not necessarily followed in pre-code boilers.

ASME, 1914:

183 On longitudinal joints, the distance from the centers of rivet holes to the edges of the plates, except rivet holes in the ends of butt straps, shall be not less than one and one-half times the diameter of the rivet holes.

Canadian Interprovincial Standard, 1931:

Lap Outside Rivet Holes

199. The lap of plate outside rivet holes measured from the outer edge of the rivet holes to edge of plate must be at least equal to diameter of rivet hole, and must not be more than 1/8 inch in excess of the diameter of the rivet hole.

Thurston, 1888:

tion. The joint is so proportioned that the fracture will occur by shearing the rivets rather than by breaking out the edge of the sheet or tearing away the lap bodily. The lap usually extends beyond the rivet-hole about 1.5 times the diameter of the rivet.

Single-row lap seam from an 1881 6hp Russell traction engine:

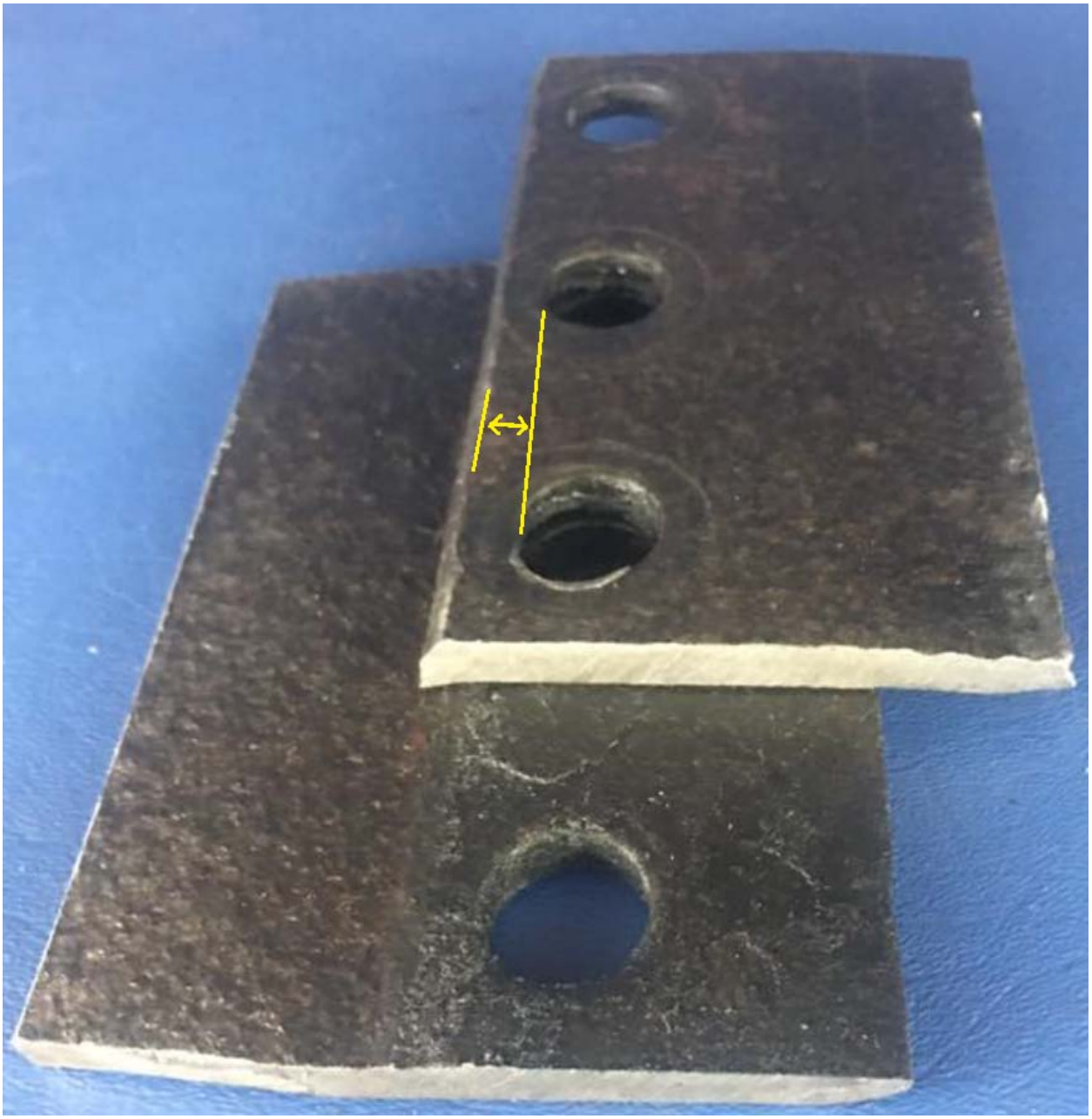

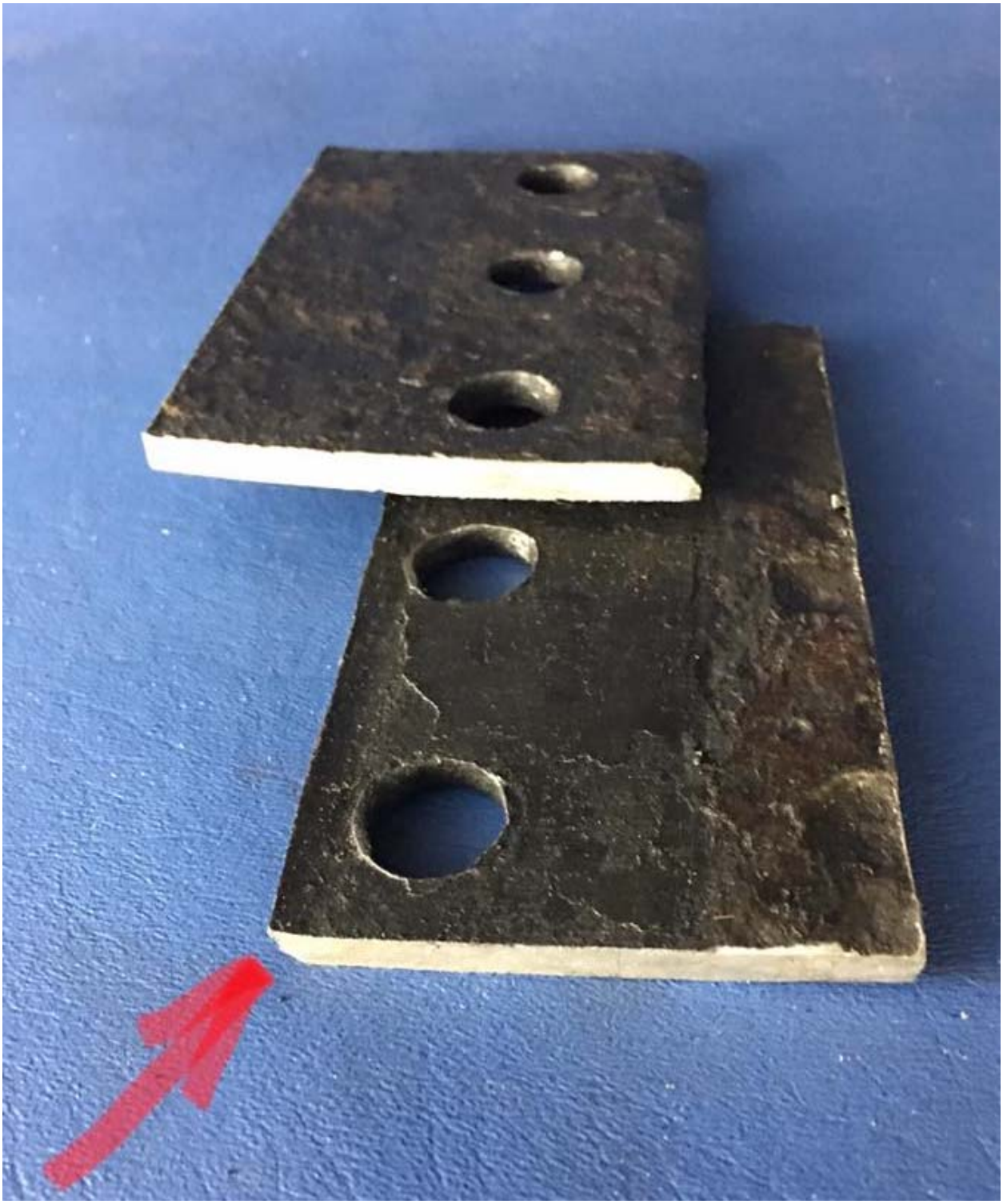

Item 19-88

Subject: At NBIC Part II propose the following be added to Thermal Fluid Heater

NBIC Location: Part 2, 2.2.12.7 c) 2)

Explanation of Need: These items are essential to preventing catastrophic loss and are low cost items.

Background Information: Reviews of incidents involving thermal fluid heaters find these items lacking.

Proposed Revision:

2.2.12.7 THERMAL FLUID HEATERS

c) Inspection

….

2) Due to the unique design and material considerations of thermal fluid heaters and vaporizers, common areas of inspection are:

….

g. Verify stack gas temperature is monitored and recorded;

h. Thermal fluids should be tested in accordance with manufacturer's specifications, at least annually and whenever degradation is suspected;

i. Stack gas temperature alarms and safety shut down devices should be considered.