**Date Distributed: January 30, 2018**

THE NATIONAL BOARD OF BOILER AND PRESSURE VESSEL INSPECTORS

# NATIONAL BOARD INSPECTION CODE COMMITTEE

# MINUTES

Meeting of January 11th, 2018
New Orleans, LA

These minutes are subject to approval and are for committee use only. They are not to be duplicated or quoted for other than committee use.

The National Board of Boiler & Pressure Vessel Inspectors
1055 Crupper Avenue
Columbus, Ohio 43229-1183
Phone: (614)888-8320
FAX: (614)847-1828

## 1. Call to Order

Vice Chair Mr. Bob Wielgoszinski called the meeting to order at 8:00 am local time.

## 2. Introduction of Members and Visitors

Mr. Wielgsozinski invited all members and visitors to introduce themselves. An attendance sheet was passed. (Attachment Pages 3-7)

It was announced that Mr. Gary Teal was sitting in as an alternate for Mr. Don Cook and Mr. Joey Burgess was sitting in as an alternate for Mr. Mark Mooney.

## 3. Announcements

Mr. Wielgoszinski asked that all members use their microphones. He announced that Chair Mr. Don Cook is ill, and expressed well wishes for his recovery. He announced that Mr. Cook will reach his term limit at the July 2018 meeting, and that a vote for a new chair of the NBIC Committee will be held at that meeting. Mr. Wielgoszinski announced that voting on code changes requires a 2/3 majority, and voting on membership items requires a 50% majority. Mr. Wielgoszinski announced that the July 2018 NBIC meeting is the deadline for approving any items to be included in the 2019 edition of the code. Mr. Besserman presented the publication schedule for the 2019 edition.Mr. Wielgoszinski invited Mr. Scribner to present on behalf of the National Board. Mr. Scribner thanked the committee members for their contribution to the code. He presented a 5 year service award to Mr. Mike Webb and a 15 year service award to Mr. Jim Sekely.

## 4. Adoption of the Agenda

Mr. Wielgoszinski asked if there were any items to be added to the agenda.

Mr. Richards added items 18-2 and 18-26. Mr. Getter added items 18-7 and 18-27, as well as membership items for Mr. Matt Sansone and Mr. Mark Horbaczewski. Mr. Galanes added items 18-11, 18-12, 18-13, 18-14, and 18-15, as well as a proposed revision to NB-240.

The agenda was adopted as modified by a unanimous vote of the NBIC Committee.

## 5. Approval of the Minutes of July 20th, 2017 Meeting

The agenda was approved as published by a unanimous vote of the NBIC Committee.

## 6. Review of Rosters

### a. Membership Nominations

Mr. Todd Creacy was appointed to SC Installation by a unanimous vote of the NBIC Committee. This appointment is subject to the approval of the Chair of the Board of Trustees.

Mr.Matt Sansone was appointed to SC Inspection by a unanimous vote of the NBIC Committee. This appointment is subject to the approval of the Chair of the Board of Trustees.

**b. Membership Reappointments**

Mr. Rob Troutt and Mr. Sid Cammeresi were reappointed to the NBIC Committee by a unanimous vote of the NBIC Committee. These reappointments are subject to the approval of the Chair of the Board of Trustees.

Mr. Tim Barker was reappointed to SC Inspection by a unanimous vote of the NBIC Committee. This reappointment is subject to the approval of the Chair of the Board of Trustees.

Mr. Joel Amato, Mr. Wayne Jones and Ms. Kathy Moore were reappointed to SC Repairs and Alterations by a unanimous vote of the NBIC Committee. These reappointments are subject to the approval of the Chair of the Board of Trustees.

Mr. Alton Cox was reappointed to SC PRD by a unanimous vote of the NBIC Committee. This reappointment is subject to the approval of the Chair of the Board of Trustees.

**c. Officer Positions**

Mr. Getter reported that previous Vice Chair S. Staniszewski has retired. Mr. Getter reported that SC voted unanimously to recommend Mr. Mark Horbaczewski as Vice Chair of SC Inspection. Mr. Horbaczewski was appointed as SC Inspection Vice Chair by a unanimous vote of the NBIC Committee. This reappointment is subject to the approval of the Chair of the Board of Trustees.

Mr. Cammeresi reported that previous Vice Chair Mr. Alton Cox reached term limit. SC PRD voted unanimously to recommend Ms. Brodeur as Vice Chair of SC PRD. Ms. Brodeur was appointed as SC PRD Vice Chair by a unanimous vote of the NBIC Committee. This reappointment is subject to the approval of the Chair of the Board of Trustees.

**7. NB-240 Procedure Update**

Mr. Galanes reported on a proposed update to NB-240 for honorary membership. Mr. Galanes explained the proposed change to the procedure to the committee. He asked that the item be sent for ballot to letter ballot. Mr. Wielgoszinski thanked Mr. Galanes for preparing this proposal. Mr. Simmons asked if the honorary membership continued in perpetuity. Mr. Galanes clarified that honorary membership will continue in perpetuity. Mr. Scribner asked if honorary membership would apply to only Main Committee members or any NBIC related committee members. Mr. Galanes said he would update the proposal to allow honorary membership to apply to members of any NBIC-related committee. Mr. Galanes asked that Mr. Wielgoszinski assign a task group for adding a contributing member status to the NBIC Procedures. Mr. Pillow, Mr. Joey Burgess, Mr. Jim Pillow, Mr. Jim Sekely, and Mr. Bob Wielgoszinski all volunteered for the task group.

**8. Report of Subcommittees**

**a. Subcommittee Installation**

**i. Interpretations**

There were no interpretations assigned to SC Installation.

**ii. Action Items – Old Business**

| **Item Number: NB11-1901** | **NBIC Location: Part 1** | **Attachment Pages 6-9** |
|---|---|---|
| **General Description:** Add guidance for the safe installation of high pressure composite pressure vessels operating<br><br>**Subgroup:** FRP<br><br>**Task Group:** R. Smith (PM), M. Richards, S. Konopacki, D. Patten and E. Wiggins<br><br>**Meeting Action:** Mr. Richards reported that no progress had been made by the Subcommittee. Mr. Wielgoszinski requested this item be sent to SC letter ballot. Mr. Richards agreed to send this item to SC Installation letter ballot. | | |

| **Item Number: NB12-0302** | **NBIC Location: Part 1** | **No Attachment** |
|---|---|---|
| **General Description:** Add installation requirements for pressure vessels for human occupancy (PVHOs)<br><br>**Subgroup:** Installation<br><br>**Task Group:** B. Moore (PM), T. Creacy, T. Millette, M. Richards, S. Reimers,<br><br>**Meeting Action:** Mr. Richards reported that work is ongoing. | | |

| **Item Number: NB14-0403** | **NBIC Location: Part 1** | **No Attachment** |
|---|---|---|
| **General Description:** Identify terms from Part 1 that need to be added to the index<br><br>**Subgroup:** Installation<br><br>**Task Group:** B. Moore (PM), M. Richards, T. Creacy, M. Washington<br><br>**Meeting Action:** Mr. Richards reported that work is ongoing. | | |

| **Item Number: NB15-0108A** | **NBIC Location: Part 1** | **Attachment Page 10** |
|---|---|---|
| **General Description:** Add a supplement to address high temperature hot water boilers<br><br>**Subgroup:** Installation<br><br>**Task Group:** M. Wadkinson (PM) B. Moore, T. Creacy, D. Patten<br><br>**Meeting Action:** Mr. Richards invited Ms. Wadkinson to present on this item. Ms. Wadkinson explained that existing text from Part 1 is being relocated to a central location for information on installation of high temperature water boilers. Additionally, the SC added some additional text to the proposed supplement as well. The item was moved to NBIC Committee letter ballot by a unanimous vote of the NBIC Committee. | | |

| Item Number: NB15-2202 | NBIC Location: Part 1 | No Attachment |
|---|---|---|

**General Description:** Add checklist for the safe installation of high pressure composite pressure vessels operating in close proximity to the public

**Subgroup:** FRP

**Task Group:** R. Smith (PM), M. Washington, R. Austin

**Meeting Action:** Mr. Richards reported that that no progress was made and that the committee plans to contact SG FRP with questions about the proposal.

| Item Number: NB15-2209 | NBIC Location: Part 1 | Attachment Pages 11-17 |
|---|---|---|

**General Description:** Develop guidance and requirements for installation of graphite pressure equipment

**Subgroup:** Graphite

**Task Group:** A. Stupica (PM), M. Richards, E. Wiggins

**Meeting Action:** Mr. Richards reported that no progress had been made by the Subcommittee. Mr. Wielgoszinski requested this item be sent to SC letter ballot. Mr. Richards agreed to send this item to SC Installation letter ballot.

| Item Number: NB16-0101 | NBIC Location: Part 1 | Attachment Page 18 |
|---|---|---|

**General Description:** Result of NB13-1101, address carbon monoxide sensors in equipment rooms

**Subgroup:** Installation

**Task Group:** E. Wiggins (PM), G. Halley, S. Konopacki, T. Creacy, T. Millette, B. Moore, P. Schuelke, R. Smith, M. Washington

**Meeting Action:** Mr. Richards invited Mr. Wiggins to present on this item. Mr. Wiggins presented the proposal, which was the result of discussion over the past three meetings. He stated that CO sensors are generally covered under NFPA codes, but the SC decided it was important to be addressed in the NBIC as well. He read the proposal to the NBIC Committee. Mr. Moore requested that the proposal address fired pressure vessels. The proposal was modified to add fired pressure vessels in addition to boilers. Mr. Scribner stated that this proposal only applies to fuel fired boilers and pressure vessels, not electric fired. The proposal was again modified to satisfy Mr. Scribner's comment. The proposal was approved as modified by a unanimous vote of the NBIC Committee.

| Item Number: NB16-2801 | NBIC Location: Part 1, Section 1 | Attachment Page 19 |
|---|---|---|

**General Description:** Result of PR16-0401, 0403, 0407, 0409 - scope creep requiring the use of manufacturer's recommendations/other industry standards

**Subgroup:** Installation

**Task Group:** B. Moore (PM), R. Smith

**Meeting Action:** Mr. Richards invited Mr. Moore to present. Mr. Moore explained the rationale for the change to satisfy a public review comment about limiting the liability of an inspector. Mr. Renaldo requested that the word "requirements" not be deleted. The approval was approved as modified by a unanimous vote of the NBIC Committee.

| Item Number: 17-133 | NBIC Location: Part 1, 3.5.3.2 | Attachment Page 20 |
|---|---|---|

**General Description:** Change "shall be located inside" to "should" in accordance with CSD-1

**Subgroup:** Installation

**Task Group:** R. Smith (PM), T. Creacy, B. Moore, P. Schuelke

**Meeting Action:** Mr. Richards invited Mr. Smith to present. Mr. Smith explained that the word "shall" will be changed to "should" in three paragraphs in Part 1 in accordance with ASME Section IV and ASME CSD-1. Mr. Newton voiced worry that these requirements would allow the commenter to not install an emergency shut down switch. The item was sent to letter ballot by a unanimous vote of the NBIC Committee.

| Item Number: 17-147 | NBIC Location: Part 1, Section 9 | Attachment Page 21 |
|---|---|---|

**General Description:** Define "Hot Water Storage Tank" in glossary

**Subgroup:** Installation

**Task Group:** R. Austin (PM), J. Brockman, P. Schuelke

**Meeting Action:** Mr. Richards invited Mr. Austin to present. Mr. Austin explained a revision to the proposal for the definition of potable water heaters. Discussion was held about whether hot water storage tanks have internal heat sources. Mr. Austin clarified they do not, which satisfied any comments. The proposal was approved by a unanimous vote of the NBIC Committee.

**iii. Action Items – New Business**

| Item Number: 17-148 | NBIC Location: Part 1 | No Attachment |
|---|---|---|

**General Description:** Vessel initial and installation inspections

**Subgroup:** SG Installation

**Task Group:** None Assigned.

**Meeting Action:** Mr. Richards reported that a task group has been assigned with Mr. Rex Smith as PM.

| Item Number: 17-159 | NBIC Location: Part 1, 4.7 | No Attachment |
|---|---|---|

**General Description:** Result of 17-147; review Part 1, 4.7 for references to hot water storage tanks

**Subgroup:** SG Installation

**Task Group:** None Assigned.

**Meeting Action:** Mr. Richards reported that a task group has been assigned with Mr. Joe Brockman as PM.

| Item Number: 18-2 | NBIC Location: Part 1 | No Attachment |
|---|---|---|

**General Description:** Comissioning of fired boilers and pressure vessels

**Subgroup:** SG Installation

**Task Group:** None Assigned.

**Meeting Action:** Mr. Richards reported that a task group has been assigned with Mr. Eddie Wiggins as PM.

| Item Number: 18-26 | NBIC Location: Part 1, S3 | No Attachment |
|---|---|---|

**General Description:** Review installation requirements for CO2 vessels

**Subgroup:** SG Installation

**Task Group:** None Assigned.

**Meeting Action:** Mr. Richards reported that the item was opened and work is ongoing.

**b. Subcommittee Inspection**

**i. Interpretations**

| Item Number: IN16-0501 | NBIC Location: Part 2 | No Attachment |
|---|---|---|

**General Description:** Change of service from Ammonia to LP gas

**Subgroup:** Inspection

**Task Group:** None assigned.

**Meeting Action:** Mr. Getter reported that the SC contacted the inquirer, who was satisfied that the 2017 edition of the code answered his interpretation response. The item was closed with no action by a unanimous vote of the NBIC Committee.

| Item Number: 17-174 | NBIC Location: Part 2 | Attachment Page 22 |
|---|---|---|

**General Description:** Use of API-510 for establishing maximum allowable operating conditions for equipment without nameplates, records, or stampings

**Subgroup:** Inspection

**Task Group:** None assigned.

**Meeting Action:** The proposed interpretation response was explained to the committee by Mr. Getter. The response was modified to include a subject line. The interpretation response was approved by a unanimous vote of the NBIC Committee.

**ii. Action Items – Old Business**

| Item Number: NB13-0903 | NBIC Location: Part 2, S2.14 | Attachment Page 23 |
|---|---|---|

**General Description:** Add safety requirements for use of liquid or gaseous fuels to fire a historical boiler

**Subgroup:** Historical

**Task Group:** D. Rupert (PM), T. Dillon, J. Larson, R. Bryce

**Meeting Action:** Mr. Getter read the proposal to the NBIC Committee, and explained it had been unanimously approved by SC Inspection. Mr. Pillow expressed a concern about how to check whether an owner or user has "extensive knowledge" related to this topic. The proposal was approved by a unanimous vote of the NBIC Committee.

| Item Number: NB13-1409 | NBIC Location: Part 2, S1 | No Attachment |
|---|---|---|

**General Description:** Address method for analyzing bulges created by overheating in stayed boiler surfaces

**Subgroup:** Locomotive

**Task Group:** P. Welch (PM), M. Mooney, R. Stone

**Meeting Action:** Mr. Getter reported no action was taken.

| Item Number: NB14-0901 | NBIC Location: Part 2 | Attachment Pages 24-28 |
|---|---|---|

**General Description:** Review inspection requirements for pressure vessels designed for high pressures

**Subgroup:** Inspection

**Task Group:** M. Horbaczewski (PM), M. Schwartzwalder, D. Graf, G. Scribner, B. Wilson

**Meeting Action:** Mr. Getter explained that a proposal had been developed and approved with one negative by SC Inspection. Mr. Wielgoszinski requested that Mr. Newton explain his negative vote in SC. Mr. Newton said that the proposal adds inspection to many vessels that have not previously been inspected. The item was sent to NBIC Committee letter ballot by a unanimous vote of the NBIC Committee. Mr. Wielgoszinski requested that the rationale for his negative be continued in the text of the letter ballot.

| Item Number: NB14-1101 | NBIC Location: Part 2 | No Attachment |
|---|---|---|

**General Description:** Diaphragm weld inspection.

**Subgroup:** Locomotive

**Task Group:** P. Welch (PM), D. Graf, R. Stone

**Meeting Action:** Mr. Getter reported no action was taken.

| Item Number: NB16-0502 | NBIC Location: Part 2 | No Attachment |
|---|---|---|

**General Description:** Gage glass and water level over historical boiler crown sheets

**Subgroup:** Historical

**Task Group:** D. Rupert (PM), T. Dillon, R. Underwood & R. Troutt

**Meeting Action:** Mr. Getter reported no action was taken.

| Item Number: NB16-1001 | NBIC Location: Part 2, CO2 Supp. | No Attachment |
|---|---|---|

**General Description:** Edit CO2 supplement based on AIA proposed revision

**Subgroup:** Inspection

**Task Group:** M. Mooney (PM), D. Buechel, T Barker, V. Newton

**Meeting Action:** Mr. Getter reported that work is ongoing.

| Item Number: NB16-1401 | NBIC Location: Part 2, S10 | No Attachment |
|---|---|---|

**General Description:** Revise and update Supplement 10 on Inspection of CRPVs

**Subgroup:** FRP

**Task Group:** N. Newhouse (PM)

**Meeting Action:** Mr. Getter reported that work is ongoing.

| Item Number: NB17-0203 | NBIC Location: Part 2, S12.5 | No Attachment |
|---|---|---|

**General Description:** Clarification on calibration of gas detectors

**Subgroup:** Inspection

**Task Group:** D. Buechel (PM), D. Graf, B. Hart

**Meeting Action:** Mr. Getter presented a proposal which was unanimously approved by SC Inspection. Mr Troutt expressed concern that the proposal requires a sticker on the CO2 sensor, which is not a practice performed by all calibration activities. Mr. Newton stated that some CO2 sensors are marketed as self-calibrating. Mr. Richards requested wording allowing for other documentation than a calibration sticker. Mr. Newton requested that this item be delayed while he gets further information from CO2 detector manufacturers. The item was withdrawn for further work at the SC level.

| Item Number: 17-136 | NBIC Location: Part 2, S2 | Attachment Pages 29-30 |
|---|---|---|

**General Description:** Update tables in Part 2, S2 with correct values

**Subgroup:** Historical

**Task Group:** J. Amato

**Meeting Action:** Mr. Getter presented a proposal which was unanimously approved by SC Inspection. This proposal replaces incorrect values in the tables section of the historical supplement. The proposal was approved by a unanimous vote of the NBIC Committee.

| Item Number: 17-140 | NBIC Location: Part 2, 5.2.2 | Attachment Pages 31-32 |
|---|---|---|

**General Description:** Updates to Part 2, 5.2.2 and NB-136 Form

**Subgroup:** Inspection

**Task Group:** None Assigned.

**Meeting Action:** Mr. Getter presented a proposal that was originally drafted by Mr. Scribner. Mr. Scribner explained that the rationale for the change was to reorganize the procedure for replacement of nameplate to improve clarity. Mr. Getter said this item was combined with 17-162. This item was sent to letter ballot by a unanimous vote of the NBIC Committee.

| Item Number: 17-153 | NBIC Location: Part 2, 2.3.6.4 | Attachment Pages 33-34 |
|---|---|---|

**General Description:** Clarify acceptable conditions for UT thickness readings on air tanks

**Subgroup:** Inspection

**Task Group:** T. Barker (PM), J. Roberts, J. Burgess, T. Shernisky, J. Mangus

**Meeting Action:** Mr. Getter presented a proposal that was previously approved by a unanimous vote of SC Inspection. Mr. Getter reported that the majority of the added language was copied verbatim from a similar section on inspection of ammonia tanks. An additional section was drafted about actions that should be taken if thickness readings do not meet thickness requirements. Mr. Galanes and Mr. Edwards requested the item be letter balloted. The item was sent to letter ballot by a unanimous vote of the NBIC Committee.

**iii. Action Items – New Business**

| Item Number: 17-162 | NBIC Location: Part 2 | Attachment Pages 35-36 |
|---|---|---|

**General Description:** Create a guide for NB-136

**Subgroup:** Inspection

**Meeting Action:** Mr. Getter reported that this item was combined with 17-140.

| Item Number: 17-164 | NBIC Location: Part 2 | Attachment Pages 37-40 |
|---|---|---|

**General Description:** Update Part 2 for consistency with changes from Part 3 item NB16-2603

**Subgroup:** Inspection

**Task Group:** Mr. Getter presented a proposal which was unanimously approved by SC Inspection. Mr. Getter explained that this change was initiated due to a change in Part 3, 4.4.1. a) 1). The proposal was approved by a unanimous vote of the NBIC Committee.

| Item Number: 18-7 | NBIC Location: Part 2 | Attachment Pages 41-43 |
|---|---|---|

**General Description:** Review inspection requirements for PHVOs.

**Subgroup:** Inspection

**Meeting Action:** Mr. Getter invited Mr. Jim Byrum to report on this item. He reported on a presentation by a manufacturer of PVHOs regarding the requirements for PVHOs in the NBIC. The proposal better addresses inspection requirements for PVHO vessels. The item was sent to letter ballot by a unanimous vote of the NBIC Committee.

| Item Number: 18-27 | NBIC Location: Part 2 | No Attachment |
|---|---|---|

**General Description:** Review installation requirements for CO2 vessels

**Subgroup:** Inspection

**Task Group:** V. Newton (PM), D. Graf, E. Brantley, M. Horbaszewski, D. Buechel

**Meeting Action:** Mr. Getter reported that Mr. Newton was assigned as PM.

**c. Subcommittee Repairs and Alterations**

**i. Interpretations**

| Item Number: 17-143 | NBIC Location: Part 3 | No Attachment |
|---|---|---|

**General Description:** Can an "R" stamp certified shop manufacture and use parts for use on the pressure boundary to complete the repair of a boiler?

**Subgroup:** Locomotive

**Task Group:** L. Moedinger (PM)

**Meeting Action:** Mr. Galanes reported that no action was taken.

| Item Number: 17-173 | NBIC Location: Part 3 | Attachment Page 44 |
|---|---|---|

**General Description:** Is adding an eliptical handhole ring on the pressure side considered a routine repair?

**Subgroup:** Repairs and Alterations

**Task Group:** None assigned.

**Meeting Action:** Mr. Galanes invited Mr. Pillow to report on this item. Mr. Pillow read the proposed response. The interpretation response was approved by a unanimous vote of the NBIC Committee.

| Item Number: 17-175 | NBIC Location: Part 3, 3.4.4 | Attachment Page 45-46 |
|---|---|---|

**General Description:** Weld metal buildup classification

**Subgroup:** Repairs and Alterations

**Task Group:** None assigned.

**Meeting Action:** Mr. Galanes invited Mr. Jamie Walker to present on this item. Mr. Walker stated that the task group elected to split the interpretation request into two – 17-175 and 18-28. Mr. Besserman suggested the item be generalized to not include specific thicknesses. Mr. Galanes and Mr. Pillow supported the specific response. Mr. Wielgoszinski turned the chair of the meeting over to Mr. Besserman because he planned to speak against the item. Mr. Wielgoszinski stated that he viewed the situation under interpretation as an alteration rather than a repair. Mr. Pillow stated that he disagreed, and did view the situation as a repair. After discussion, the item was withdrawn to SC Repairs and Alterations for further work. Mr. Besserman returned the chair of the meeting to Mr. Wielgoszinski. The committee requested that the National Board send a letter to the commenter to see if the response to 17-178 satisfies his question.

| Item Number: 17-176 | NBIC Location: Part 3, Section 1 | Attachment Page 47 |
|---|---|---|

**General Description:** NBIC repair/replacement activities for parts

**Subgroup:** Repairs and Alterations

**Task Group:** None assigned.

**Meeting Action:** Mr. Galanes read the committee question and the committee reply. There was no

discussion about the proposed response. The item was approved by a unanimous vote of the NBIC Committee.

| Item Number: 17-177 | NBIC Location: Part 3, 2.5.3.6 | Attachment Page 48 |
|---|---|---|

**General Description:** Tube to header weld requirements

**Subgroup:** Repairs and Alterations

**Task Group:** None assigned.

**Meeting Action:** Mr. Galanes read the committee question and the committee reply. Mr. Wielgoszinski requested that the committee question clarify that the weld in question is not a butt weld. The proposal's committee question was modified to address Mr. Wielgoszinski's comments. The proposed response was approved as modified by a unanimous vote of the NBIC Committee.

| Item Number: 17-178 | NBIC Location: Part 3 | Attachment Page 49 |
|---|---|---|

**General Description:** Omission of PWHT repair/alteration classification

**Subgroup:** Repairs and Alterations

**Task Group:** None assigned.

**Meeting Action:** Mr. Galanes invited Mr. Schaefer to report on this item. Mr. Galanes stated that this interpretation is very similar to 17-175, and this response if approved may satisfy the commenter of 17-175. This response was approved by a unanimous vote of the NBIC Committee.

| Item Number: 17-181 | NBIC Location: Part 3 | No Attachment |
|---|---|---|

**General Description:** Repair inspection by owner-user

**Subgroup:** Repairs and Alterations

**Task Group:**

**Meeting Action:** The interpretation request was closed with no action by a unanimous vote of the NBIC Committee.

| Item Number: 18-11 | NBIC Location: Part 3 | Attachment Page 50 |
|---|---|---|

**General Description:** Repair/alteration plan for ASME Section VIII, Div. 2 Class 1 vessels

**Subgroup:** Repairs and Alterations

**Task Group:** None assigned.

**Meeting Action:** Mr. Galanes invited Mr. Edwards to report on this item. He stated that this interpretation request was internally generated. He summarized the proposed committee question and reply, and explained that the interpretation was generated to clarify how the NBIC should interact with requirements for Section XIII, Div. 2, Class 1 vessels. Mr. Renaldo asked if a corresponding change would be made to the text of the NBIC. Mr. Edwards stated that no corresponding code change would be made. The interpretation request was approved by a unanimous vote of the NBIC Committee.

| Item Number: 18-28 | NBIC Location: Part 3 | No Attachment |
|---|---|---|

**General Description:** Weld metal buildup classification

**Subgroup:** Repairs and Alterations

**Task Group:** None assigned.

**Meeting Action:** Mr. Galanes elected to withdraw this item for further work based on the discussion of item 17-175.

At this point in the meeting, Mr. Richards and Mr. Burgess left the meeting. Mr. Richards designated Mr. Ben Schaefer as his alternate. Mr. Burgess designated Mr. Barker as the alternate for Mr. Mooney.

**ii. Action Items – Old Business**

| **Item Number: NB13-1401** | **NBIC Location: Part 3, S1.9.2** | **No Attachment** |
|---|---|---|

**General Description:** Add wording in this section regarding boiler tube welding

**Subgroup:** Locomotive

**Task Group:** R. Stone (PM), L. Moedinger

**Meeting Action:** Mr. Galanes reported that no action was taken.

| **Item Number: NB13-1406** | **NBIC Location: Part 3, S1** | **No Attachment** |
|---|---|---|

**General Description:** Add requirements for repair of superheater units

**Subgroup:** Repairs and Alterations

**Task Group:** None assigned.

**Meeting Action:** Mr. Galanes reported that this item was returned to SG Locomotive with the recommendation that it be closed.

| **Item Number: NB13-1407** | **NBIC Location: Part 3, S1** | **No Attachment** |
|---|---|---|

**General Description:** Add requirements for repair and alteration of bolts, nuts, and studs in locomotive boilers

**Subgroup:** Locomotive

**Task Group:** R. Stone (PM), L. Moedinger

**Meeting Action:** Mr. Galanes reported that no action was taken.

| **Item Number: NB13-1408** | **NBIC Location: Part 3, S1** | **Attachment Pages 51-55** |
|---|---|---|

**General Description:** Add requirements for repair and alteration of locomotive boilers with threaded boiler studs of the taper thread and straight thread varieties

**Subgroup:** Locomotive

**Task Group: :** R. Stone (PM), L. Moedinger

**Meeting Action:** A proposal was approved by SC Repairs and Alterations prior to this meeting. The item was sent to NBIC Committee letter ballot by a unanimous vote of the NBIC Committee.

| Item Number: NB14-1801 | NBIC Location: Part 3 | No Attachment |
|---|---|---|

**General Description:** Ferrules

**Subgroup:** Locomotive

**Task Group:** P. Welch (PM), R. Stone

**Meeting Action:** Mr. Galanes reported that no action was taken.

| Item Number: NB14-1802 | NBIC Location: Part 3 | No Attachment |
|---|---|---|

**General Description:** Riveted staybolt head dimensions and Figure S1.2.2-c

**Subgroup:** Locomotive

**Task Group:** P. Welch (PM), R. Stone

**Meeting Action:** Mr. Galanes reported that no action was taken.

| Item Number: NB15-1602 | NBIC Location: Part 3, S2.7.1 | No Attachment |
|---|---|---|

**General Description:** Revise material list for historical boiler reports to include bolts, studs, nuts and formed pressure parts

**Subgroup:** Historical

**Task Group:** T. Dillon (PM), M. Wahl, G. Galanes

**Meeting Action:** Mr. Galanes reported that no action was taken.

| Item Number: NB15-2208 | NBIC Location: Part 3, S3 | No Attachment |
|---|---|---|

**General Description:** Investigate repair options for graphite block heat exchangers

**Subgroup:** Graphite

**Task Group:** Greg Becherer (PM)

**Meeting Action:** Mr. Galanes reported that no action was taken.

| Item Number: NB15-2210 | NBIC Location: Part 3 | Attachment Page 56-57 |
|---|---|---|

**General Description:** Reduce cementing requirements for plugging of tubes

**Subgroup:** Graphite

**Task Group:** C. Cary (PM)

**Meeting Action:** A proposal was approved by SC Repairs and Alterations prior to this meeting. This item was sent to NBIC Committee letter ballot by unanimous vote of NBIC Committee.

| Item Number: NB16-0303 | NBIC Location: Part 3 | No Attachment |
|---|---|---|

**General Description:** Fillet welded patches

**Subgroup:** SG Repairs and Alterations

**Task Group:** B. Boseo (PM), B. Morelock, R Underwood, J. Walker

**Meeting Action:** Mr. Galanes reported that work was ongoing.

**Item Number: NB16-0503** **NBIC Location: Part 3, S2.13.13.4** **No Attachment**

**General Description:** Add types of rivet heads

**Subgroup:** Historical

**Task Group:** None Assigned.

**Meeting Action:** Mr. Galanes reported that no action was taken.

**Item Number: NB16-0608** **NBIC Location: Part 3, 1.8.2** **No Attachment**

**General Description:** Address Nuclear QA program requirements for owner and certificate holder

**Subgroup:** Repairs and Alterations

**Task Group:** NR Task Group

**Meeting Action:** Mr. Galanes reported that no action was taken.

**Item Number: NB16-0609** **NBIC Location: Part 3, 1.8.7 and 1.8.8** **Attachment Pages 58-59**

**General Description:** Add requirements from 1.8.6 l) 2) for Category 2 and 3 for subcontracting services such as calibration activities

**Subgroup:** Repairs and Alterations

**Task Group:** NR Task Group

**Meeting Action:** . Mr. Galanes requested that Mr. Edwards report on this item. The item updates requirements for subcontracting calibration services in relation to the "NR" program. The proposal was sent to NBIC Committee letter ballot by a unanimous vote of the NBIC Committee.

**Item Number: NB16-0810** **NBIC Location: Part 3, 3.4.3 e)** **Attachment Page 60**

**General Description:** Add additional example of alteration relating to burners

**Subgroup:** Repairs and Alterations

**Task Group:** M. Webb(PM), G. Scribner

**Meeting Action:** Mr. Galanes invited Mr. Webb to present on this item. Mr. Webb explained that a revision was made to satisfy Mr. Edwards' comments on a previous ballot. This item was approved by a unanimous vote of the NBIC Committee.

**Item Number: NB16-1302** **NBIC Location: Part 3, S3.2** **Attachment Page 61**

**General Description:** Pressure test requirements rewrite for graphite vessels

**Subgroup:** Graphite

**Task Group:** None assigned

**Meeting Action:** This item was approved prior to this meeting by a unanimous vote of SC Repairs and Alterations. The proposal was approved by unanimous vote of the NBIC Committee.

| Item Number: NB16-1303 | NBIC Location: Part 3, S3.5.1 f) | Attachment Page 62 |
|---|---|---|

**General Description:** Revise wording mandating examination and evaluation for graphite vessels

**Subgroup:** Graphite

**Task Group:** None assigned

**Meeting Action:** This item was approved prior to this meeting by a unanimous vote of SC Repairs and Alterations. The proposal was approved by unanimous vote of the NBIC Committee.

| Item Number: NB16-1402 | NBIC Location: Part 3 | No Attachment |
|---|---|---|

**General Description:** Life extension for high pressure vessels above 20 years

**Subgroup:** FRP

**Task Group:** M. Gorman (PM)

**Meeting Action:** . Mr. Galanes reported that no action was taken.

| Item Number: NB16-1403 | NBIC Location: Part 3, S4 | No Attachment |
|---|---|---|

**General Description:** Add information on repair of high pressure vessels

**Subgroup:** FRP

**Task Group:** N. Sirosh (PM)

**Meeting Action:** Mr. Galanes reported that no action was taken.

| Item Number: NB16-1502 | NBIC Location: Part 3 | No Attachment |
|---|---|---|

**General Description:** Develop supplement for repairs and alterations based on international construction standards

**Subgroup:** SG Repairs and Alterations

**Task Group:** International Repair Supplement Task Group

**Meeting Action:** Mr. Galanes reported that no action was taken.

| Item Number: NB16-1801 | NBIC Location: Part 3, S1 | No Attachment |
|---|---|---|

**General Description:** Review Part 3 S1 for revisions based on the publication of ASME Section 1, Part PL

**Subgroup:** Locomotive

**Task Group:** L. Moedinger (PM)

**Meeting Action:** Mr. Galanes reported that no action was taken.

| Item Number: NB16-2504 | NBIC Location: Part 3, S1 | No Attachment |
|---|---|---|

**General Description:** Evaluate adding SA-234 to the piping reference table S1.1.3.1

**Subgroup:** Locomotive

**Task Group:** D. Griner, M. Janssen

**Meeting Action:** Mr. Galanes reported that no action was taken.

| Item Number: NB16-2602 | NBIC Location: Part 3, Section 9 | No Attachment |
|---|---|---|

**General Description:** Add definitions for practicable and impracticable to glossary

**Subgroup:** Repairs and Alterations

**Task Group:** R. Underwood (PM), R. Milletti, J. Sekely

**Meeting Action:** . Mr. Galanes reported that no action was taken.

| Item Number: NB17-0301 | NBIC Location: Part 3 | No Attachment |
|---|---|---|

**General Description:** Is plugging a leak with a screw an acceptable method of repair?

**Subgroup:** Repairs and Alterations

**Task Group:** None assigned.

**Meeting Action:** Mr. Galanes explained that the NBIC does not address mechanical repairs. The item was closed with no action by a unanimous vote of the NBIC Committee. The NBIC Secretary will send a letter to the commenter explaining the reasons for the action.

| Item Number: NB17-0601 | NBIC Location: Part 3 | No Attachment |
|---|---|---|

**General Description:** Single staybolt with threaded and welded connections

**Subgroup:** Historical

**Task Group:** M. Wahl (PM), G. Galanes, R. Underwood

**Meeting Action:** Mr. Amato stated that the Subgroup generated the item in discussion at the subgroup, but then closed the item after discussion. The item was closed with no action by a unanimous vote of the NBIC Committee.

| Item Number: NB17-0602 | NBIC Location: Part 3 | No Attachment |
|---|---|---|

**General Description:** Scope of repair/new historical boiler with an R Stamp

**Subgroup:** Historical

**Task Group:** R. Underwood (PM), M. Wahl, J. Amato, D. Rose, M. Jordan

**Meeting Action:** Mr. Galanes reported that no action was taken.

| Item Number: NB17-0701 | NBIC Location: Part 3 | No Attachment |
|---|---|---|

**General Description:** Add references to NQA Part 2, 2.1.4 and 2.7 to NR program

**Subgroup:** Repairs and Alterations

**Task Group:** NR Task Group

**Meeting Action:** Mr. Galanes reported that no action was taken.

At this point in the meeting, Mr. Simmons and Mr. Newton left the meeting. Mr. Newton designated Mr. Ernst Brantley as his alternate.

| Item Number: 17-114 | NBIC Location: Part 3, 2.5.3.6 | No Attachment |
|---|---|---|

**General Description:** Controlled fill technique for Grade 91 steel

**Subgroup:** Repairs and Alterations

**Task Group:** G. Galanes (PM)

**Meeting Action:** Mr. Galanes stated that the item was closed after the commenter was not able to be reached. The NBIC Committee voted to close the item with no action by a unanimous vote. The NBIC Secretary will send a letter to the commenter explaining the rationale for closing the item.

| Item Number: 17-134 | NBIC Location: Part 3, Section 5 | No Attachment |
|---|---|---|

**General Description:** Proposed Revision for registration of Form R-1 with the National Board containing ASME pressure part data reports attached.

**Subgroup:** Repairs and Alterations

**Task Group:** P. Shanks (PM), Rob Troutt, Joel Amato, Kathy Moore, Paul Edwards

**Meeting Action:** Mr. Galanes reported that no action was taken.

| Item Number: 17-137 | NBIC Location: Part 3, S4.18.2 | No Attachment |
|---|---|---|

**General Description:** Remove "sand" blasting and replace with "abrasive" in Part 3, S4.18.2

**Subgroup:** FRP

**Task Group:** Terry Cowley

**Meeting Action:** Mr. Galanes reported that no action was taken.

| Item Number: 17-139 | NBIC Location: Part 3, 2.2.3 | No Attachment |
|---|---|---|

**General Description:** Performance qualification by independent qualifier

**Subgroup:** Repairs and Alterations

**Task Group:** Jim Pillow

**Meeting Action:** Mr. Galanes reported that no action was taken. This item is on hold until ASME Section IX takes action on a similar item.

| Item Number: 17-145 | NBIC Location: Part 3, S1.2.2-S1.25 | No Attachment |
|---|---|---|
| **General Description:** Clarify repair vs. alteration for locomotive boilers<br><br>**Subgroup:** Locomotive<br><br>**Task Group:** L. Moedinger (PM)<br><br>**Meeting Action:** Mr. Galanes reported that no action was taken. | | |

| Item Number: 17-152 | NBIC Location: Part 3, 2.5.3 | No Attachment |
|---|---|---|
| **General Description:** Revise WM2 and WM6 to allow fill thickness weld repairs to HRSG tube to header welds in steam service<br><br>**Subgroup:** Repairs and Alterations<br><br>**Task Group:** G. Galanes (PM)<br><br>**Meeting Action:** This item was approved by NBIC Committee letter ballot prior to meeting. | | |

**iii. Action Items – New Business**

| Item Number: 17-155 | NBIC Location: Part 3, S1 | No Attachment |
|---|---|---|
| **General Description:** Throttle pipes, dry pipes, superheater headers, and front end steam pipes requirements<br><br>**Subgroup:** SG Locomotive<br><br>**Task Group:** None assigned.<br><br>**Meeting Action:** Mr. Galanes reported that no action was taken. | | |

| Item Number: 17-156 | NBIC Location: Part 3, S1 | No Attachment |
|---|---|---|
| **General Description:** Welding/brazing activities for Locomotive Boilers<br><br>**Subgroup:** SG Locomotive<br><br>**Task Group:** None assigned.<br><br>**Meeting Action:** Mr. Galanes reported that no action was taken. | | |

| Item Number: 17-157 | NBIC Location: Part 3, S1 | No Attachment |
|---|---|---|
| **General Description:** Bolts, nuts, and washers<br><br>**Subgroup:** SG Locomotive<br><br>**Task Group:** None assigned.<br><br>**Meeting Action:** Mr. Galanes reported that no action was taken. | | |

| Item Number: 17-160 | NBIC Location: Part 3, S1 | No Attachment |
|---|---|---|

**General Description:** Partial knuckle replacement

**Subgroup:** SG Locomotive

**Task Group:** None assigned.

**Meeting Action:** Mr. Galanes reported that no action was taken.

| Item Number: 17-161 | NBIC Location: Part 3, 3.3.2 | No Attachment |
|---|---|---|

**General Description:** Routine repair of corrugating rolls

**Subgroup:** SG Repairs and Alterations

**Task Group:** None assigned.

**Meeting Action:** Mr. Galanes explained why weld repair of corrugating rolls should not be considered a routine repair. The NBIC Committee voted to close the item with no action by a unanimous vote. The NBIC Secretary will send a letter to the commenter explaining the rationale for closing the item.

| Item Number: 17-165 | NBIC Location: Part 3, S3 | No Attachment |
|---|---|---|

**General Description:** Change reimpregnation of graphite to routine repair

**Subgroup:** SG Graphite

**Task Group:** None assigned.

**Meeting Action:** Mr. Galanes reported that no action was taken.

| Item Number: 17-166 | NBIC Location: Part 3, S3 | No Attachment |
|---|---|---|

**General Description:** Remove nozzle replacement and tube replacement from graphite routine repair list

**Subgroup:** SG Graphite

**Task Group:** None assigned.

**Meeting Action:** Mr. Galanes reported that no action was taken.

| Item Number: 17-167 | NBIC Location: Part 3, S3 | No Attachment |
|---|---|---|

**General Description:** Clarify repair inspection requirements for machined only graphite parts

**Subgroup:** SG Graphite

**Task Group:** None assigned.

**Meeting Action:** Mr. Galanes reported that no action was taken.

| Item Number: 17-168 | NBIC Location: Part 3, 1.6 | Attachment Page 63-85 |
|---|---|---|

**General Description:** General revision of NR quality program requirements

**Subgroup:** SG Repairs and Alterations

**Task Group:** None assigned.

**Meeting Action:** Mr. Galanes asked Mr. Edwards to report on this item. He stated that prior to the July meeting the proposal will be balloted to SG RA, then SC RA, then the NBIC Committee. The proposal contains a large revision to the NR Quality Program. Mr. Edwards outlined the major changes in the revision. Mr. Wielgoszinski proposed that the proposal be sent to letter ballot, subject to it being approved by SC Repairs and Alterations. This course of action was approved by a unanimous vote of the NBIC Committee.

| **Item Number: 17-170** | **NBIC Location: Part 3, 2.5.3.6** | **No Attachment** |
|---|---|---|

**General Description:** Revise WM6 to allow fill thickness weld repairs to HRSG tube to header welds in steam service

**Subgroup:** SG Repairs and Alterations

**Task Group:** None assigned.

**Meeting Action:** This item was approved by NBIC Committee letter ballot prior to meeting.

| **Item Number: 17-179** | **NBIC Location: Part 3, Section 5** | **No Attachment** |
|---|---|---|

**General Description:** R Form Guides

**Subgroup:** SG Repairs and Alterations

**Task Group:** None assigned.

**Meeting Action:** Mr. Galanes reported that no action was taken.

| **Item Number: 17-180** | **NBIC Location: Part 3, 2.5.3.6** | **Attachment Page 86** |
|---|---|---|

**General Description:** Remove "impracticable" from WM6

**Subgroup:** SG Repairs and Alterations

**Task Group:** None assigned.

**Meeting Action:** Mr. Galanes presented a proposal for a change to Welding Method 6.Mr. Galanes explained that the change was made to remove redundancy between 2.5.3 and 2.5.3.6. The proposal was approved by a unanimous vote of the NBIC Committee.

| **Item Number: 18-12** | **NBIC Location: Part 3** | **No Attachment** |
|---|---|---|

**General Description:** Revision to WM6 to allow for external weld metal buildup

**Subgroup:** SG Repairs and Alterations

**Task Group:** None assigned.

**Meeting Action:** Mr. Galanes reported that Mr. Jon Siefert was assigned as PM.

| **Item Number: 18-13** | **NBIC Location: Part 3** | **No Attachment** |
|---|---|---|

**General Description:** New Welding Method 7 for dissimilar metal welds

**Subgroup:** SG Repairs and Alterations

**Task Group:** None assigned.

**Meeting Action:** Mr. Galanes reported that Mr. Jon Siefert was assigned as PM.

| Item Number: 18-14 | NBIC Location: Part 3, Section 2 | No Attachment |
|---|---|---|

**General Description:** Update SWPS list

**Subgroup:** SG Repairs and Alterations

**Task Group:** None assigned.

**Meeting Action:** Mr. Galanes reported that Mr. Jim Sekely was assigned as PM.

| Item Number: 18-15 | NBIC Location: Part 3 | Attachment Page 87 |
|---|---|---|

**General Description:**

**Subgroup:** SG Repairs and Alterations

**Task Group:** None assigned.

**Meeting Action:** Mr. Galanes invited Mr. Edwards to report on this item. Mr. Edwards explained that this proposal was borne out of a comparison between the R Quality Program requirements and NR Quality Program requirements. The change adds more specific requirements to the R Program Statement of Authority and Responsibility section. Mr. Webb expressed his support for the item. Ms. Wadkinson and Mr. Galanes also expressed their support. The proposal was approved by a unanimous vote of the NBIC.

**b. Subcommittee Pressure Relief Devices**

**i. Interpretations**

There were no interpretation requests assigned to SC PRD.

**ii. Action Items – Old Business**

| Item Number: NB12-0901 | NBIC Location: Part 3 | No Attachment |
|---|---|---|

**General Description:** Prepare a guide for repair of tank vents

**Subgroup:** SG PRD

**Task Group:** D. DeMichael (PM), K. Simmons, B. Donalson, B. Dobbins, K. Beise, B. Nutter

**Meeting Action:** Mr. Cammeresi reported that no action was taken by SC PRD.

| Item Number: NB14-0602A | NBIC Location: Part 1 | Attachment Pages 88-90 |
|---|---|---|

**General Description:** Improve index in Part 1 relating to pressure relief devices

**Task Group:** M. Brodeur (PM), S. Cammeresi, K. Beise

**Meeting Action:** Mr. Besserman stated that the index is not part of the consensus standard. Mr. Wielgoszinski stated that the item will be sent to review and comment ballot, and then NB staff can update index based on MC review and comment ballot

| Item Number: NB14-0602B | NBIC Location: Part 2 | No Attachment |
|---|---|---|

**General Description:** Improve index in Part 2 relating to pressure relief devices

**Subgroup:** SG PRD

**Task Group:** D. Marek (PM), B. Donalson, D. DeMichael, B. Hart

**Meeting Action:** Mr. Cammeresi reported that no action was taken by SC PRD.

| Item Number: NB14-0602C | NBIC Location: Part 3 | No Attachment |
|---|---|---|

**General Description:** Improve index in Part 3 relating to pressure relief devices

**Subgroup:** SG PRD

**Task Group:** B. Nutter (PM), R. McCaffrey, T. Patel, K. Simmons

**Meeting Action:** Mr. Cammeresi reported that no action was taken by SC PRD.

| Item Number: NB15-0108B | NBIC Location: Part 1 | No Attachment |
|---|---|---|

**General Description:** Address pressure relief devices in new supplement on high temperature hot water boilers

**Subgroup:** SG PRD

**Task Group:** A. Renaldo (PM), D. Marek, D. McHugh, B. Nutter

**Meeting Action:** Mr. Cammeresi requested that Ms. Wadkinson report on this item. She stated that PRD is working to add guidance for installation of high temperature water boilers as it relates to PRD.

| Item Number: NB15-0305 | NBIC Location: Part 1 | No Attachment |
|---|---|---|

**General Description:** Create Guidelines for Installation of Overpressure Protection by System Design.

**Subgroup:** SG PRD

**Task Group:** D. Marek (PM), B. Nutter, A. Renaldo, D. DeMichael

**Meeting Action:** Mr. Cammeresi reported that no action was taken by SC PRD.

| Item Number: NB15-0307 | NBIC Location: Part 3 | No Attachment |
|---|---|---|

**General Description:** Create Guidelines for Repair of Pin Devices.

**Subgroup:** SG PRD

**Task Group:** D. McHugh (PM), A. Renaldo, T. Tarbay, K. Kraabel

**Meeting Action:** Mr. Cammeresi reported that no action was taken by SC PRD.

| Item Number: NB15-0308 | NBIC Location: Part 1 | No Attachment |
|---|---|---|

**General Description:** Create Guidelines for Installation of Pressure Relief Devices for Organic Fluid Vaporizers.

**Subgroup:** SG PRD

**Task Group:** T. Patel (PM), K. Beise, B. Nutter

**Meeting Action:** Mr. Cammeresi reported that this item will be letter balloted to SG PRD and then SC PRD.

| Item Number: NB15-0310 | NBIC Location: Part 3, 1.7.5.4 | Attachment Page 91 |
|---|---|---|

**General Description:** Give Guidance as to Which Spring Chart Should be used in Repairs.

**Subgroup:** SG PRD

**Task Group:** A. Cox (PM), B. Nutter, M. Brodeur, T. Patel, K. Simmons, R. McCaffrey, S. Irvin

**Meeting Action:** Mr. Cammeresi reported that this item was approved at the subcommittee with one negative. Mr. Beirne explained that the negative was due to ambiguity about what type of documentation is required after changing a spring in a pressure relief valve. The proposal was sent to letter ballot by a unanimous vote of the NBIC Committee. Mr. Wielgoszinski requested that Mr. Donalson's comment be included in the letter ballot.

| Item Number: NB15-0315 | NBIC Location: Part 1, 4.5.6 and 5.3.6 | No Attachment |
|---|---|---|

**General Description:** Review isolation Valve Requirements.

**Subgroup:** SG PRD

**Task Group:** D. DeMichael (PM), B. Nutter, A. Renaldo, D. Marek

**Meeting Action:** Mr. Cammeresi reported that no action was taken by SC PRD.

| Item Number: NB15-0321 | NBIC Location: Part 2, 2.5.7 a) | No Attachment |
|---|---|---|

**General Description:** Review testing requirements for inservice testing of pressure relief devices

**Subgroup:** SG PRD

**Task Group:** A. Cox, A. Renaldo (PM), D. Marek, S. Irvin, D. DeMichael, B. Nutter, J. Ball

**Meeting Action:** Mr. Cammeresi reported that this item will be sent to SG PRD letter ballot.

| Item Number: NB15-0324 | NBIC Location: Part 2 | No Attachment |
|---|---|---|

**General Description:** Based on IN15-0301; the Sub-Committee on Pressure Relief Devices recognizes a need to create guidelines for storage and shelf life with respect to inspection and testing frequencies.

**Subgroup:** SG PRD

**Task Group:** A. Renaldo (PM), B. Nutter, K. Simmons, D. Marek, J. Little

**Meeting Action:** Mr. Cammeresi reported that this item will be sent to SG PRD letter ballot.

| Item Number: NB16-0401 | NBIC Location: Part 4 | Attachment Page 92 |
|---|---|---|

**General Description:** Seals matching VR nameplate

**Subgroup:** SG PRD

**Task Group:** A. Donaldson (PM), S. Irvin, T. Patel, D. Marek, M. Brodeur, B. Nutter

**Meeting Action:** Mr. Cammeresi reported that this item was approved by a unanimous vote of SC PRD.There were no comments on the proposal. The proposal was approved by a unanimous vote of the NBIC Committee.

| Item Number: NB16-0603 | NBIC Location: Part 3, S7 and S9 | No Attachment |
|---|---|---|

**General Description:** Add requirements for when the "NR" program is applied to safety related relief valves in nuclear service, came from NR task group

**Subgroup:** SG PRD

**Task Group:** NR Task Group

**Meeting Action:** This item was approved by NBIC Committee letter ballot prior to this meeting.

| Item Number: NB16-0805 | NBIC Location: Part 1 | No Attachment |
|---|---|---|

**General Description:** Temperature ratings for discharge piping and fittings

**Subgroup:** SG PRD

**Task Group:** A. Renaldo (PM), T. Patel, D. Marek

**Meeting Action:** Mr. Cammeresi reported that this item will be sent to SG PRD letter ballot.

| Item Number: NB17-0401 | NBIC Location: Part 4 | No Attachment |
|---|---|---|

**General Description:** Valve drain plug recommendations for shipping

**Subgroup:** SG PRD

**Task Group:** K. Beise (PM), M. Brodeur, R. McCaffrey

**Meeting Action:** . Cammeresi reported that no action was taken by SC PRD.

| Item Number: NB17-0402 | NBIC Location: Part 4 | No Attachment |
|---|---|---|

**General Description:** Review Part 4 index

**Subgroup:** SG PRD

**Task Group:** A. Cox (PM), S. Irvin, K. Beise, K. Simmons

**Meeting Action:** Mr. Cammeresi reported that no action was taken by SC PRD.

| Item Number: NB17-0403 | NBIC Location: Part 4 | No Attachment |
|---|---|---|

**General Description:** Review Part 4 for including new T/O requirements

**Subgroup:** SG PRD

**Task Group:** K. Simmons (PM), D. McHugh, A. Cox, D. Marek

**Meeting Action:** Mr. Cammeresi reported that the current plan is to ballot this item to SG PRD, SC PRD, and the NBIC Committee prior to the July 2018 meeting. Mr. Wielgoszinski requested that the item be balloted to SG PRD and SC PRD concurrently.

| Item Number: NB17-0404 | NBIC Location: Part 4 | No Attachment |
|---|---|---|

**General Description:** Add paragraphs g) - j) in Part 4, 2.3.6 to Part 1, S5.7.6

**Subgroup:** SG PRD

**Task Group:** B. Nutter (PM), D. Marek, T. Beirne

**Meeting Action:** Mr. Cammeresi reported that no action was taken by SC PRD.

| Item Number: 17-115 | NBIC Location: Part 4, Section 2 | No Attachment |
|---|---|---|

**General Description:** Complete rewrite of Section 2 combining common requirements into a general requirements section for all pressure relief devices.

**Subgroup:** SG PRD

**Task Group:** A. Renaldo (PM), D. McHugh, D. Marek

**Meeting Action:** Mr. Cammeresi reported that no action was taken by SC PRD.

| Item Number: 17-117 | NBIC Location: Part 4, 2.2.1 g) | Attachment Page 93 |
|---|---|---|

**General Description:** clarify what "properly vented" means

**Subgroup:** SG PRD

**Task Group:** R. McCaffrey (PM), M. Brodeur

**Meeting Action:** Mr. Cammeresi presented a proposal that removes ambiguity about what a “properly vented” valve is. The proposal was previously approved by SC PRD with a unanimous vote. The proposal was approved by a unanimous vote of the NBIC Committee.

| Item Number: 17-118 | NBIC Location: Part 4, 2.2.4 c) | Attachment Pages 94-95 |
|---|---|---|

**General Description:** Provide metric equivalent and possibly express conversion as formula instead of paragraph.

**Subgroup:** SG PRD

**Task Group:** B. Nutter (PM)

**Meeting Action:** Mr. Cammeresi presented a proposal to the NBIC Committee that was approved by a unanimous vote of SC PRD. Ms. Wadkinson expressed concern that this action changed the text so it was no longer consistent with ASME Section I, PG-67. Mr. Beirne explained that the proposal did not

change any requirements. The only change is that the item is shown as a formula rather than a text paragraph. Discussion was held about proper metrication of the value 1000 BTU/lb as 645 W*hr/kg or 646 W*hr/kg. It was decided 646 W*hr/kg was the proper metrication value. This item was sent to NBIC Committee letter ballot by a unanimous vote of the NBIC Committee.

| Item Number: 17-119 | NBIC Location: Part 4, 2.2.5 | No Attachment |
|---|---|---|

**General Description:** States pressure setting may exceed 10% range. Clarify by how much.

**Subgroup:** SG PRD

**Task Group:** T. Patel (PM), D. Marek

**Meeting Action:** Mr. Cammeresi reported that no action was taken by SC PRD.

| Item Number: 17-120 | NBIC Location: Part 4, 2.2.10 d) | Attachment Page 96 |
|---|---|---|

**General Description:** Add Changeover valve definition in glossary and remove definition from text.

**Subgroup:** SG PRD

**Task Group:** A. Renaldo

**Meeting Action:** Mr. Cammeresi presented a proposal to the NBIC Committee that was approved by a unanimous vote of SC PRD. Mr. Wielgoszinski asked that a sentence referencing the acceptability of the valve in the original code of construction remain in the text and not be deleted. Mr. Cammeresi agreed with the change and the proposal was updated based on Mr. Wielgoszinski's comment. Mr. Welch asked if changeover valves can be used on Section I power boilers, and Mr. Beirne presented the code case that allows their use on power boilers. The proposal was approved with a unanimous vote of the NBIC Committee.

| Item Number: 17-121 | NBIC Location: Part 4, 2.2.10 e), h) | No Attachment |
|---|---|---|

**General Description:** e) Language needs cleaned up. h) delete "so located or piped as to be carried clear from running boards or platforms."

**Subgroup:** SG PRD

**Task Group:**

**Meeting Action:** This item was approved by NBIC Committee letter ballot prior to this meeting.

| Item Number: 17-122 | NBIC Location: Part 4, 2.3.6 g) | No Attachment |
|---|---|---|

**General Description:** Clean up last sentence of main paragraph. Possibly break into two paragraphs to consider hazards at the discharge and hazards along discharge piping

**Subgroup:** SG PRD

**Task Group:** T. Patel (PM), B. Nutter, K. Beise

**Meeting Action:** Mr. Cammeresi reported that no action was taken by SC PRD.

| Item Number: 17-125 | NBIC Location: Part 4, 2.4.2 | No Attachment |
|---|---|---|

**General Description:** Delete last sentence "The inlet opening shall have an inside diameter equal to or greater than the seat diameter". This is a manufacturing requirement and the inspector has no way of

verifying this after installation.

**Subgroup:** SG PRD

**Task Group:** None assigned.

**Meeting Action:** This item was approved by NBIC Committee letter ballot prior to this meeting.

| **Item Number: 17-126** | **NBIC Location: Part 4, 2.4.2** | **No Attachment** |
|---|---|---|

**General Description:** Determination of the valve capacity using the maximum output method needs to be described or delete reference.

**Subgroup:** SG PRD

**Task Group:** D. Marek (PM), J. Ball

**Meeting Action:** Mr. Cammeresi reported that no action was taken by SC PRD.

| **Item Number: 17-127** | **NBIC Location: Part 4, 2.4.4.1** | **No Attachment** |
|---|---|---|

**General Description:** rewrite to state "Temperature and pressure relief valves shall be installed by either the manufacturer or the equipment installer before a water heater is placed in operation."

**Subgroup:** SG PRD

**Task Group:** None assigned.

**Meeting Action:** This item was approved by NBIC Committee letter ballot prior to this meeting.

| **Item Number: 17-128** | **NBIC Location: Part 4, 2.4.4.3** | **No Attachment** |
|---|---|---|

**General Description:** allows Y-base to be used while 2.4.1.6 a) prohibits. This appears to be a conflict.

**Subgroup:** SG PRD

**Task Group:** B. Nutter (PM), S. Irvin

**Meeting Action:** Mr. Cammeresi reported that no action was taken by SC PRD.

| **Item Number: 17-130** | **NBIC Location: Part 4,2.5.6 f)** | **No Attachment** |
|---|---|---|

**General Description:** This could just point to safe point of discharge since we have a definition

**Subgroup:** SG PRD

**Task Group:** None assigned.

**Meeting Action:** This item was approved by NBIC Committee letter ballot prior to this meeting.

| **Item Number: 17-131** | **NBIC Location: Part 4, 2.5.7 a)** | **No Attachment** |
|---|---|---|

**General Description:** Preface by "Unless otherwise protected,..."

**Subgroup:** SG PRD

**Task Group:** J. Ball (PM)

**Meeting Action:** Mr. Cammeresi reported that no action was taken by SC PRD.

| Item Number: 17-132 | NBIC Location: Part 4, 3.2.6 | No Attachment |
|---|---|---|

**General Description:** Paragraph 3.2.6 can be put into tabular format.

**Subgroup:** SG PRD

**Task Group:** None assigned.

**Meeting Action:** Mr. Cammeresi reported that no action was taken by SC PRD.

**iii. Action Items – New Business**

**9. Liaison Activities**

**a. American Society of Mechanical Engineers BPV Code (ASME BPV)**

Mr. Edwards reported on activities at ASME. Mr. Edwards reported that work is ongoing on CA-1 in regards to Field Sites, CAP-21, CAP-22, and Nuclear conformity assessment. Additionally he reported that 18 Parts Fabrication certificates have been issued and 15 applications are in progress. He reported that a major reorganization of QAI-1 standard is currently under development. (Attachment Pages 100-102)

**b. American Welding Society (AWS)**

Mr. Sekely reported that works ongoing at AWS to systematically update all SWPSs. AWS is also in communication with EPRI to develop SWPSs for use in Nuclear facilities. (Attachment Page 103)

**c. American Petroleum Institute (API)**

Mr. Riley, who previously gave this report, recently resigned his position from the NBIC Committee. Mr. Wielgoszinski asked if anyone attended API committee meetings and was interested in presenting liaison reports at this committee.

**d. Department of Transportation (DOT)**

Mr. Staniszewski, who previously gave this report, recently resigned his position from the NBIC Committee. Mr. Wielgoszinski stated that the NBIC Board of Trustees will work to find a person who is able to give DOT liaison reports to the NBIC Committee. Mr. Moedinger expressed concern about inadequate training given to Federal Railroad Administration inspectors in regards to boiler inspection. Mr. Moedinger requested that the committee make some action to help address inadequate training among locomotive and historical boiler inspectors.

**10. Future Meetings**

- July 16th-19th, 2018 – Columbus, Ohio
- January 14th-17th – Location TBD

Mr. Wielgoszinski gave three options for the location of the January 2019 meeting that were selected by the NBIC Executive Committee. The options were South Florida, San Antonio, and Savannah/Charleston. The NBIC Committee selected South Florida as their preferred option.

**11. Adjournment**

Mr. Wielgoszinski adjourned the meeting at 3:00pm local time.

Respectfully submitted,

Brad Besserman
NBIC Secretary

# Contents


| | |
|---|---|
| MC Attendance Sheet 1-11-18 | 1 |
| NB11-1901 SG Approved 6-27-17 | 6 |
| NB15-0108A wadkinson 1-18-18 | 10 |
| NB15-2209 SG Graphite 10-26-16 | 11 |
| NB16-0101 Wiggins 1-10-2018 (1) | 18 |
| NB16-2801 Moore 1-11-2018 | 19 |
| 17-133 Smith 1-10-18 (2) | 20 |
| 17-147 Austin 1-9-18 | 21 |
| 17-174 - Inquiry Response | 22 |
| NB13-0903 Metzmaier 180111 | 23 |
| NB14-0901 - Metzmaier - 180110 | 24 |
| 17-136 Rose 180110 | 29 |
| 17-140 - Metzmaier- 180109 (NB-136, Rev 9) | 31 |
| 17-153 - Metzmaier - 180109 | 33 |
| 17-162 - Metzmaier - 180111 (NB-136 Guide) | 35 |
| 17-164 - Metzmaier - 180110 | 37 |
| 17-164 - Reference Document | 38 |
| 18-7 - Metzmaier - 180109 | 41 |
| 17-173 Interp - 3.3.2 Routine Repairs 1-9-18 Passed MC | 44 |
| 17-175 Interp PWHT and Weld Metal Build-up 1-11-18 Pulled Back | 45 |
| 17-176 interp Repairs to A Part 1-9-18 passed for MC | 47 |
| 17-177 Interp- Use of Welding Method 6 - Tube-To-Header Welds 1-9-18 MC | 48 |
| 17-178 Allen 12-4-17 --1-10-18 for MC | 49 |
| 18-11(i) NBIC Interpretation Request - ASME VIII-2 Class 1 | 50 |
| NB13-1408 agenda attach - Rev 1-10-18 | 51 |
| NB15-2210 agenda attach 1-11-18 for MC Ballot | 56 |
| NB16-0609 updated red-with removed text MC | 58 |
| NB16-0810  NBIC Part 3 3.4.4 (e) 1-10-18 rev-1 | 60 |
| NB16-1302 agenda attach | 61 |
| NB16-1303 agenda attached | 62 |
| 17-168 Withers 01-09-18 | 63 |
| 17-180 Galanes 1-9-18 | 86 |
| 18-15 A and R Statement | 87 |
| NB14-0602A Part 1 Index improvements MB 1-9-18 | 88 |
| NB15-0310 Spring Chart JAC 1-11-18 MC Revised | 91 |
| NB16-0401 VR Attachment AD 1-10-18 | 92 |

17-117 Properly Vented TPB 1-9-18 93
17-118 Proposal_2018_01_09 94
17-120 changeover valve definition amr 1-11-18 MC Revised 96
ASME Liaison Report - NBIC Mtg 01-11-2018 97
NBIC January 2018 AWS Liason Report 100

## NBIC Committee Attendance Sheet - 1/11/18

| Name | Company | Phone Number | Email | Signature |
|---|---|---|---|---|
| Donald Cook | State of California | (510) 622-3050 | dcook@dir.ca.gov | |
| Robert Wielgoszinski | Hartford Steam Boiler | (860) 722-5064 | robert_wielgoszinski@hsbct.com | RWWielgoszinski |
| Brad Besserman | National Board | (614) 431-3236 | bbesserman@nationalboard.org | |
| Joel Amato | State of Minnesota | (651) 284-5137 | joel.amato@state.mn.us | |
| Randy Austin | State of Arizona | (602) 542-1648 | randy.austin@azdosh.gov | |
| Sid Cammeresi | TEAM ~~Furmanite~~ | (409) 392-0271 | scammeresi@furmanite.com | |
| Paul Edwards | ~~CBI~~ STONE & WEBSTER | 781-298-3826 ~~(617) 589-5677~~ | ~~paul.edwards@CBI.com~~ EDWARDSP4@ASME.ORG | Paul D. Edwards |
| George Galanes | Diamond Technical Services | (815) 634-2727 | ggalanes@diamondtechnicalservices.com | |
| Jim Getter | Worthington Industries | (614) 840-3087 | jim.getter@worthingtonindustries.com | |
| Craig Hopkins | Seattle Boiler Works | (206) 762-0737 | chopkins@seattleboiler.com | |
| Larry McManamon | Boilermakers National Apprenticeship Program | (708) 636-6656 | lmac@glabap.com | |
| Mark Mooney | Liberty Mutual | (781) 891-8900 | mark.mooney@libertymutual.com | Alternate Joey Burgess |
| Brian Morelock | Eastman Chemical Company | (423) 229-1205 | morelock@eastman.com | Brian Morelock |
| Venus Newton | Boiler & Property Consulting | (770) 614-3111 | venus.newton@boilerproperty.com | |
| James Pillow | Common Arc | (860) 688-2531 | jpillow@commonarc.com | J Pillow |
| Mike Richards | Southern Company | (205) 992-7111 | hmichaelrichards.pe@gmail.com | |
| James Sekely | Consultant | (412) 389-5567 | jsekely@comcast.net | |
| Kevin Simmons | Pentair | (281) 274-4526 | Kevin.L.Simmons@emerson.com ~~kevin.simmons@pentair.com~~ | |
| Rob Troutt | State of Texas | (512) 638-2727 | rob.troutt@tdlr.texas.gov | |
| Melissa Wadkinnson | Fulton | (315) 298-7112 | melissa.wadkinson@fulton.com | |
| Michael Webb | Xcel Energy | (303) 885-9398 | mike.webb@xcelenergy.com | Mike Webb |

| Name | Company | Phone Number | Email | Signature |
|---|---|---|---|---|
| Paul Welch | ARISE | (770) 464-4380 | paul.welch@ariseinc.com | [signature] |
| Gary Scribner | NABFVI | | | [signature] |
| Joey Burgess | Liberty Mutual | 940 475-1033 | joey.burgess@libertymutual.com | [signature] |
| | | | | |
| | | | | |
| | | | | |
| | | | | |
| | | | | |
| | | | | |
| | | | | |
| | | | | |
| | | | | |
| | | | | |
| | | | | |
| | | | | |
| | | | | |
| | | | | |
| | | | | |
| | | | | |
| | | | | |
| | | | | |
| | | | | |

| Name | Company | Phone Number | Email | Signature |
|---|---|---|---|---|
| Paul Shanks | one CIS | 832 716 4249 | Paul.Shanks@onecis.com | |
| Bill Vallara | N. Board | | bvallance@nationalboard.org | |
| Terrance Hellman | Nat. Bd. | | thellman@nationalboard.org | |
| KATHY MOORE | JOE MOORE & CO | 919 832 1665 | Kathy.moore@joemoorecompany.com | |
| TIM BARKER | FM GLOBAL | 360 801 3790 | TIMOTHY.BARKER@FMGLOBAL.COM | |
| DAVID Martinez | FM Global | 757-274-6106 | david.martinez@fmglobal.com | |
| REX SMITH | AUTHORITIES INSPECTION ASSOCIATES | 281-751 1150 | RSMITH@AIBUL.ORG | |
| EDDIE WIGGINS | LIBERTY MUTUM | 256-497-7092 | EDWARD.WIGGINS@LIBERTYMUTUAL.COM | |
| DAWN HOLT | Babcock & Wilcox | 330-860-1080 | drholt6babcock.com | |
| ADAM RENALDO | PRAXAIR | 716-879-2928 | Adam_Renaldo@Praxair.com | |
| Gary Teel | State of CA | 714-767-1407 | gteeledir.ca.gov | |
| Rick Musser | Strasburg Rail Road | 717 682-7589 | rick@strasburgrailroad.com | |
| Linn Moedinger | Strasburg RR | 717 575-4478 | linnwm@supernet.com | |
| JAMIE WALKER | HAYES MECHANICAL | 713 910-5892 | JWALKER@HAYESMECHANICAL.COM | |
| | | | | |
| | | | | |
| | | | | |
| | | | | |
| | | | | |
| | | | | |
| | | | | |
| | | | | |

| Name | Company | Phone Number | Email | Signature |
|---|---|---|---|---|
| Monte Bost | HSB | 937-620 3676 | Monte_bost@hsb.com | Monte Bost |
| Michael Quisenberry | Allen's Tili State Mechanical | (806) 316 7174 | Michael @ allentri.com | |
| Ron Spiker | state of SC | 803-608 1630 | ron.spiker2@llr.sc.gov ronndj@gmail.com | |
| Ben Schaefer | AEP | 614-716-1843 | bschaefer@aep.com | |
| DAN MAREK | MAINTHIA TECHNOLOGIES | 216-433 5494 | DANIEL T. MAREK @ NASA.GOV | |
| MARVIN BYRUM | ALABAMA | 334 956 7411 | MARVIN.BYRUM@ LABOR.ALABAMA.GOV | |
| DON PATTEN | BAY CITY BOILER | (510) 786. 3711 | dpatten@baycityboiler.com | |
| DAVE BUECHEL | HSB | 412-310- 7740 | david.Buechel@HSB.com | |
| ERNEST BRANTLEY | XL Insura | 337 842-7044 | ERNEST.BRANTLEY@ BPCLLC6A.COM | |
| | | | | |
| | | | | |
| | | | | |
| | | | | |
| | | | | |
| | | | | |
| | | | | |
| | | | | |
| | | | | |
| | | | | |
| | | | | |
| | | | | |
| | | | | |
| | | | | |

| Name | Company | Phone Number | Email | Signature |
|---|---|---|---|---|
| Ray Reamey | Turner Ind. Grp. | 225-214-2898 | RReamey@Turner-Industries.com | |
| Jodi Metzmaier | NBBI | 614-888-8320 | Jmetzmaier@nationalboard.org | |
| Thomas Beirne | NBBI | 614-530-2774 | tbeirne@nationalboard.org | |
| John Mangas | air Products | 925-997-5633 | mangasjc@airproducts.com | |
| Darrell Graf | APCI | 601-569-0534 | GRAFDR@AIRPRODUCTS.COM | |
| Wayne Jones | ARISE | OM File | OM File | |
| Brian Moore | HSB | 860 722-5657 | brian_moore@hsb.com | |
| Rick Valdez | ARB, INC | 6161 331-6024 | rvaldez@prim.com | |
| Brian Bosed | Graycor Services LLC | 630 684-7300 | brian_bosed@graycor.com | |
| | | | | |
| | | | | |
| | | | | |
| | | | | |
| | | | | |
| | | | | |
| | | | | |
| | | | | |
| | | | | |
| | | | | |
| | | | | |
| | | | | |
| | | | | |

**Draft 16-09-1**

**NB11-1901**

## S3.0 Installation of High Pressure Composite Pressure Vessels

At the time of vessel installation, the current edition of all referenced documents shall apply.

### S3.1 Scope

This supplement provides requirements for the installation of high pressure composite vessels (HPCPV). This supplement is applicable to pressure vessels with the MAWP not exceeding 15,000 psi, and is applicable to the following classes of vessels:

a) Metallic vessel with a Fiber Reinforced Plastic (FRP) hoop wrap over the shell part of the vessel (both load sharing)

b) Metallic vessel with a full FRP wrap (both load sharing)

c) FRP vessel with a non load sharing metallic liner

d) FRP vessel with a non load sharing non metallic liner

### S3.2 Supports

Design of supports, foundations, and settings shall consider the dead loads, live loads, wind, and seismic loads. Vibration and thermal expansion shall also be considered. The design of supports, foundations, and settings shall be in accordance with ASCE/SEI 7, *Minimum Design Loads for Buildings and Other Structures*. The importance factors used in calculating the seismic and wind loads shall be the highest value specified for any category in ASCE/SEI 7.

### S3.3 Clearances

The pressure vessel installation shall allow sufficient clearance for normal operation, maintenance, and inspection. Stacking of pressure vessels is permitted. The minimum clear space between pressure vessels shall be 1 ft. vertical and 2 ft. horizontal. Vessel nameplates shall be visible after installation for inspection.

The location of vessels containing flammable fluids shall comply with NFPA [2, Table 7.3.2.3.1.2(a)] *Minimum Distance From Outdoor ($GH_2$) Systems to Exposures (U.S.Units).* The vessel owner shall document the vessel pressure and pipe diameters used as a basis for compliance with NFPA 2 location requirements.

### S3.4 Piping Loads

Piping loads on vessel nozzles shall be determined by a formal flexibility analysis per ASME B31.12: paragraph IP-6.1.5(b). The piping loads shall not exceed the maximum nozzle loads defined by the vessel manufacturer.

S3.5 Mechanical Connections

Mechanical connections shall comply with pressure vessel manufacturer's instructions. Mechanical connections shall comply with applicable codes. Connections to threaded nozzles shall have primary and secondary seals. The seal design shall include a method for detecting a leak in the primary seal. Seal functionality shall be demonstrated at the initial pressurization of the vessel.

S3.6 Pressure Indicating Devices

Each pressure vessel shall be equipped with a pressure gage mounted on the vessel. The dial range shall be from 0 psi to not less than 1.25 times the vessel MAWP. The pressure gage shall have an opening not to exceed 0.055in (1.4mm) (No. 54 drill size) at the inlet connection. In addition, vessel pressure shall be monitored by a suitable remote pressure indicating device with alarm having an indicating range of 0 psi to not less than 1.25 times the vessel MAWP.

S3.7 Pressure Relief Devices

Each pressure vessel shall be protected by pressure relief devices per the following requirements.

a) Pressure relief devices shall be suitable for the intended service.

b) Pressure relief devices are to be manufactured in accordance with a national or international standard and certified for capacity (or resistance to flow for rupture disk devices) by the National Board.

c) Dead weight or weighted lever pressure relief valves are prohibited.

d) Pressure relief valves shall not be fitted with lifting devices.

e) The pressure relief device shall be installed directly on the pressure vessel with no isolation valves between the vessel and the pressure relief device except:

1) when these isolation valves are so constructed or positively controlled below the minimum required capacity, that closing the maximum number of valves at one time will not reduce the pressure relieving capacity, or

2) upon specific acceptance of the jurisdiction, an isolation valve between vessel and its pressure relief device may be provided for vessel inspection and repair only. The isolation valve shall be arranged so it can be locked or sealed open.

f) The discharge from pressure relief device(s) shall be directed upward so as to prevent any impingement of escaping fluid upon the vessel, adjacent vessels, adjacent structures, or personnel. The discharge must be to outdoors, not under any structure or roof that might permit formation of a “cloud”. The pressure relief device(s) discharge piping shall be designed so that it cannot become plugged by animals, rain water, or other materials.

g) The pressure relief device(s) shall be set at a pressure not exceeding the MAWP of the vessel.

h) The pressure relief device(s) shall have sufficient capacity to ensure the pressure vessel does not exceed the MAWP of that specified in the original code of construction.

i) The owner shall document the basis for selection of the pressure relief device(s) used, including capacity.

j) The owner shall have such analysis available for review by the jurisdiction.

k) Pressure relief devices and discharge piping shall be supported so that reaction forces are not transmitted to the vessel.

l) Heat detection system: a heat activated system shall be provided so that vessel contents will be vented per f) (above), if any part of the vessel is exposed to a temperature higher than 220 $^{o}$F.

m) Positive methods shall be incorporated to prevent overfilling of the vessel.

S3.8 Assessment of Installation

a) Isolation valve(s) shall be installed directly on each vessel, but not between the vessel and the pressure relief device except as noted in 3.7, e), above.

b) Vessels shall **not** be buried.

c) Vessels may be installed in a vault subject to a hazard analysis, verified by the Authorized Inspector, or the jurisdiction, to include as a minimum the following:

1) Ventilation
2) Inlet and outlet openings
3) Access to vessels
4) Clearances
5) Intrusion of ground water
6) Designed for cover loads
7) Explosion control
8) Ignition sources
9) Noncombustible construction
10) Remote monitoring for leaks, smoke, and fire
11) Remote controlled isolation valves

12) Other safety requirements

d) Fire and heat detection/suppression provisions shall comply with local jurisdictional requirements and as a minimum include relief scenarios in the event of a fire or impending overpressure from heat sources.

e) Installation locations shall provide the following:

1) Guard posts shall be provided to protect the vessels from vehicular damage per NFPA [2:4.14.1]. Protection from wind, seismic events, and other miscellaneous impacts shall be provided.

2) Supports and barriers shall be constructed of non-combustible materials.

3) Vessels shall be protected from degradation due to direct sunlight.

4) Access to vessels shall be limited to authorized personnel.

5) Any fence surrounding the vessels shall be provided with a minimum of two gates. The gates shall open outward, and shall be capable of being opened from the inside without a key.

6) Access for initial and periodic visual inspection and NDE of vessels, supports, piping, pressure gages or devices, relief devices and related piping, and other associated equipment.

7) Completed installations shall be validated by the local jurisdiction or an Authorized Inspection Agency as addressing all of the above and jurisdictional requirements prior to first use. This verification shall include an itemized check list identifying all applicable areas and date of the inspection by authorized personnel. This verification shall be posted in a conspicuous location near the vessel and on file with the local jurisdiction. Certificates shall be updated as required by mandated subsequent inspections.

8) Piping installation shall comply with ASME B31.12 *Hydrogen Piping and Pipelines* or NFPA [2:7.1.15] [2:7.3.1.2.5].

10) The vessels shall be electrically bonded and grounded per NFPA [55:10.2.6].

S3.9 Ladders and runways

A minimum of two exits shall be provided for each walkway or enclosed space. The distance from any point on the walkway to the nearest exit shall not exceed 75 ft.

S3.10 Guide for Developing an Installation Assessment Checklist

The following checklist lists most, but not necessarily all, items that should be reviewed at the time of vessel installation.

# SUPPLEMENT XX

# HIGH-TEMPERATURE WATER BOILERS

## SXX.1 SCOPE

A high-temperature water boiler is a power boiler ~~intended for operation at~~ in which water is heated and operates at a pressures ~~in excess of exceeding~~ 160 psig (1.1 MPa) and/or temperatures in excess of ~~exceeding~~ 250° (121°C).

## SXX.2 INSTALLATION REQUIREMENTS

In addition to the requirements listed in Part 1, Section I and Part 1, Section 2 for Power Boilers, the requirements below shall apply:

a) High-temperature water boilers shall be provided with a means of adding water to the boiler or system while under pressure. ~~(relocate 2.5.1.2 (g))~~

b) The recirculating return line for a high-temperature water boiler shall be provided with the stop valve, or valves, required for the main discharge outlet on the boiler. ~~(relocate 2.5.1.4 (j))~~

c) Each high-temperature water boiler shall have a drain of NPS 1 (DN25) minimum, which discharges to a safe location. ~~(relocate 2.6.3.1 ( c))~~

d) Each high-temperature water boiler shall have a temperature gage or other reporting device located to provide an accurate representation of the temperature at or near the boiler outlet. ~~(relocate 2.8.3)~~

e) For high-temperature water boilers, safety relief valves shall have a closed bonnet, and valve bodies shall not be constructed of cast iron. ~~(2.9.1 (e))~~

f) The required relieving capacity in pounds per hour of the safety or safety relief valves on a high-temperature water boiler shall be determined by dividing the maximum output in Btu/hr at the boiler nozzle obtained by the firing of any fuel for which the unit is designed by one thousand. ~~(2.9.1.3)~~

g) Discharge piping from pressure relief valves on high-temperature water boilers shall have adequate provisions for water drainage as well as steam venting. ~~(2.9.6 (i))~~

h) Piping for high-temperature water boilers shall include provisions for the expansion and contraction of hot-water mains connected to the boiler(s) so there will be no undue strain transmitted to the boiler(s). ~~(3.7.9.1 (3b))~~

i) Expansion tanks~~, installed in closed loop systems,~~ shall have sufficient volume to handle the required expansion of the total system at the required operating temperature.
    1) A low-pressure interlock and a low-water level interlock are recommended.

j) It is essential that the pump selection provides the required flow through the boiler, handles the total system head, and be specifically designed to handle water at the required operating temperature. Proof of flow is recommended for forced circulation boilers.

k) Each high-temperature water boiler shall be protected from over-temperature by two temperature-operated controls.
    1) Each boiler shall have a control that will cut off the fuel supply when the water temperature reaches an operating limit, which shall be less than the maximum allowable temperature.
    2) In addition to the above, each high-temperature water boiler shall have a safety limit control with manual reset that will cut off the fuel supply to prevent the water temperature from exceeding the maximum allowable temperature at the boiler outlet.

**Installation, Impervious graphite Equip.:** **NB 15-2209**

**as submitted by Andrew Stupica to Graphite SG Graphite for discussion**

**Rev's: July 2015 & (Nov 2015 Rev2) & (Dec2015 rev3)…(July-21-2016 rev4) Aug-19-2016 rev5 – Oct-26-2016 rev6**

## SX.1 SCOPE

This supplement provides ~~requirements and~~ guidelines for the installation and related consideration of impervious/impregnated graphite pressure vessels.

SX.2 Definitions: SX.2 Glossary of terms/definitions: "see last page of this document…"

## Sx3 General requirements

### Sx3.1 Transportation of Units to Installation Site

Receiving and Initial Inspection of Graphite equipment

~~For users protection, it is suggested G~~graphite equipment should be thoroughly inspected and tested as it is received in order to identify any in-transit damage. Whenever possible, this inspection ~~is best~~should be made before the exchanger is removed from the carrier. ~~Some pressure, not to exceed design pressure, such as operating pressure, can be applied on the service/process side to~~ To verify the unit has arrived in an undamaged condition, a pressure test may be performed. This pressure test shall not exceed the MAWP of the vessel. ~~DO NOT EXCEED THE NAME PLATE PRESSURE LIMIT or SEVERE DAMAGE MAY RESULT~~. Graphite equipment may arrive from the manufacturer under ~~slight~~ low pressure and/or with shock ~~indicators~~ detectors as an indication of un-damaged arrival. ~~Cylindrical graphite heat exchangers should not have strapping and transport hold~~ Transport straps should only be mounted on the main shell body because end components are less sturdy. ~~downs on end heads/channels and graphite dome ends which are less sturdy than the main shell body.~~ Discussion between users and ~~suppliers~~ manufacturers ~~on~~ regarding transport details, such as use of air-ride trucks, is worthwhile. Any crating should be inspected both for direct damage and/or evidence of improper handling. ~~(such as chains/cables secured to critical~~

~~graphite heads/chambers or components).~~ If there is any evidence of damage, notify the manufacturer.

Some ~~large type heat exchangers/units~~graphite pressure equipment may be shipped unassembled for later assembly ~~by authorized personnel~~. Review any packing or check list. All parts should be carefully inspected. ~~Often only a service side hydrostatic test (not to exceed design pressures) may be administered to verify transit damage but an added careful inspection of all parts is also suggested for a thorough assessment. Review any packing or check list and~~ Ppay special attention to graphite parts surfaces. Avoid pry bars, chisels, wedges or excessive force to separate any protective covers from graphite nozzles or openings. Activity around graphite surfaces should progress gently and with caution.

~~Impervious graphite exchangers/equipment may have multiple pass designs on both service and process sides in the end chambers.~~ ~~For extended storage where a chance of~~Where freezing could occur, open all vents and drains ~~in chambers on service side and all vents and drains in on the process side~~ after a pressure test to drain out all water from all passes and pockets to prevent freeze damage. ~~Impervious graphite exchangers/equipment may have multiple pass designs on both service and process sides in the end chambers.~~ Follow other good practices such as to prime the unit with an antifreeze solution and/or drain and dry it completely.

## Sx3.2 Equipment parameters/ Clearances /Movement

~~These impregnated~~Impregnated graphite ~~heat exchangers and vessels~~equipment ~~are units which~~ utilize the properties of graphite to primarily transfer heat in corrosive application and with those properties usually contain corrosive media. Proper handling, installation, operation and maintenance of ~~these units~~this equipment will ensure many years of trouble-free service. The construction details can be obtained by consulting the bill of materials and the assembly drawing provided by the manufacturer.

In many cases, ~~the units~~ graphite pressure equipment is~~are~~ of a modular construction & design and ~~are possible to~~may be assembled in the field. Installation and surrounding space for this assembly should consider that impregnated graphite ~~heat exchangers are~~pressure equipment may be readily disassembled~~ from their internal graphite components if cylindrical or unstacked if it is a square or rectangular graphite block~~. ~~This is done preferably in a vertical position based on the orientation of the vessels and disassembly technique.~~Consideration should be given to the orientation of the equipment for potential disassembly.

~~For safety, keep~~Keep the following points in mind when handling impervious graphite ~~heat exchangers~~pressure equipment as impervious graphite is easier to damage than metal components.

- Use only soft slings when handling
- ~~. If steel cables are employed there should be some provision of protection/barrier for the graphite parts~~Graphite parts should be protected with a barrier if steel cables or chains are employed
- ~~.~~Lifting and transportation ~~of impervious graphite heat exchangers~~ should be done at designated lifting points or per manufacturer's recommendations
- ~~.~~Avoid~~-~~ lifting ~~impervious graphite equipment~~ by placing slings directly around the graphite.

Sx3.x Supports/Foundations

See NBIC Part 1, 1.6.1 for requirements on supports, foundations, and settings.~~Supporting the unit considerations for graphite pressure equipment is similar to pressure vessel installation NBIC Part 1, Section 4.~~

~~Foundations and supports shall be adequate to prevent settling or the transmission of stresses, vibrations or shock loads to the graphite pressure vessel. Any base structure shall be designed to support the exchanger and also to eliminate movements or moments caused by but not limited to possible hydraulic thrusts of process and service fluids.~~

Additionally, ~~Heat exchangers~~graphite pressure equipment should be set level and square so that all piping connections may be made without excessive force. ~~Equipment may be in various orientations such as vertical, horizontal or other but with all installations~~Regardless of equipment orientation, ~~it is usually recommended that consideration are mad~~ consideration should be given to minimize~~s~~ air entrapment ~~at the highest point.~~.

Graphite pressure equipment may be built with bolted on lined vessel ~~parts~~components ~~that contain the same corrosive materials that is handled by the graphite pressure equipment~~. These lined ~~parts~~ components may or may not be insulated. Any design of side bracing should avoid direct contact with outer vessel wall that could create cold wall effect~~promote hot/cold reactions~~.

Sx3.x Piping Connections

Impregnated graphite components are strongest in compression, weakest in tension and thus most all connections are ~~bolted~~ by design in compression. Before ~~reassembling the heat exchanger~~connecting piping, ~~grooves and surfaces on the impregnated graphite blocks and headers for~~ gasket~~s~~ surfaces including serrations ~~and baffles~~ should be ~~cleaned~~ thoroughly cleaned to prevent any leakage of fluids. Use a suitable solvent if possible to completely remove ~~completely~~ all dirt or contaminants from connections~~, if any~~. Be careful not to scratch or gouge the graphite surface as it is ~~not as immune~~more susceptible to damage ~~as~~ than metallic ~~components~~surfaces. Gaskets ~~are recommended to~~should be very soft/low-stress ~~&~~ and flat thus avoiding any high spots and stress concentrations. ~~(r~~Refer to graphite equipment manufacturer for any spring settings, gasket ~~&~~ and bolt torque recommendations. ~~)~~

~~Carefully connect to units and prevent undue stress from being transmitted to the exchanger's graphite parts.~~ Flexible connections such as expansion joints and bellows are recommended for the impregnated graphite connections. ~~to considerably reduce the connecting stress from pipe loads.~~ These are typically made from a suitable corrosion resistant material ~~&~~ and installed as close to the

~~exchanger graphite~~ nozzles as possible. These are recommended to isolate the ~~unit~~ equipment from but not limited to vibration, misalignment and thermal expansion of the piping or other loads which can impose stress on the impregnated graphite components or other nozzles that would transmit loads to the graphite.

After positioning and initial tightening of connections to graphite parts, the bolts/ nuts shall be tightened ~~by means of a torque wrench set~~ to the torque value provided by the manufacturer. Bolt torque charts or assembly drawings, which can be obtained from the equipment manufacturer, may be utilized ~~for~~ to determine these values. Equipment supplier/manufacturers data should be used ~~first and as a primary resource~~if available. Bolts are tightened in multiple stages (such as 3 or 4 stages) and in a diametrically staggered pattern starting with a torque value that is a small percentage of the final torque value until design values are achieved. ~~OEM Graphite equipment suppliers should have drawing details for owners of equipment or basic torque values charts if none are provided for old units that lack this information. Equipment supplier/manufacturers data should be used first and as a primary resource.~~

**Sx3.x Instruments and controls.**

Pressure: ~~Need for pressure indicating devices/controllers shall be considered in the installation of graphite pressure equipment and shall not allow the vessel to exceed MAWP. Additionally, the installation of pressure relief devices on both process and service sides of the exchanger are recommended or may be required by rules or laws~~. See NBIC Part 1, 4.4.2 and 4.5 for requirements related to pressure indicating devices and pressure relief devices.

Temperature control: Automatically controlled systems, such as for heating of impregnated graphite equipment, may be considered. ~~It~~ The temperature control~~would~~ should ~~allow~~ provide for over temperature protection such that inlet temperature ~~heat~~ is regulated to maintain a specified operating limit which shall be less than the maximum allowable temperature.

Sensors ~~control~~: ~~Automatic~~ Continuous monitoring ~~of the service~~ is suggested since process streams used in ~~Graphite~~ graphite heat exchangers~~equipment~~ are usually corrosive and a failure path or crossover to the service side ~~would need to~~should be identified ~~as soon as possible~~ with immediate correction and action.

Flow control ~~is critical~~: In operation of Graphite heat exchangers~~equipment~~ cold fluid flow is usually started first and the hotter product follows in small incremental steps. Shutting down a unit allows for the hotter fluid to be stopped and colder fluid to ~~slowly be~~be slowly reduced. Any unexpected or unregulated in-process rapid loss of cooling that allows heat buildup is a hazard to the equipment as a sudden ~~cold~~ surge of cold fluid could flash and damage equipment internals or have more severe consequences.

**Sx3.1 ~~Nondestructive exam~~Post-Installation Activities**

- Due to the nature of impregnated graphite, the surface is subject to light scratches (much more than a metallic material) and it is often difficult to distinguish scratches from cracks without further investigation. Consult the manufacturer as required.
- Graphite pressure equipment may be damaged by concentrated hydroblasting or pressure washing.
- Careful consideration should be given to painting graphite pressure equipment because improper painting can damage the equipment.
- ~~Nondestructive examinations (NDE) of impregnated graphite and related pressure retaining items shall be performed by those certified in the visual exam methods as specified in the governing code of construction.~~

- ~~Additional NDE exams may be employed by or under the guidance of the OEM. Due to the nature of impregnated graphite, the surface is subject to light scratches (much more than a metallic material) and difficult sometimes to distinguish them from cracks without further investigation.~~

## SX.2 Glossary of terms/definitions:

**Impervious graphite** is a composite manufactured by impregnating porous graphite with chemically resistant synthetic resins used in the construction of graphite pressure equipment. With special processing the graphite becomes impervious, even to gases & under pressure. The final product partakes of the properties of both graphite and resin, but the predominate characteristics are similar to graphite which gives the most useful properties with its natural corrosion resistance and conductivity as a heat exchange material. Unlike corrosion resistant metals, graphite does not depend on the formation of a surface film or oxide for corrosion resistance, nor does it exhibit a measurable corrosion rate. Once rendered impervious, however, the chemical inertness of graphite may be limited by the characteristics of the resin such as a phenolic resin which is resistant to most acids, salt solutions and organic compounds but not suitable to alkalis and strong oxidizing chemicals that may degrade & weaken the material with no visible/measurable sign of material loss.

End components – Components attached to the main shell of graphite pressure equipment including heads, channels, domes, and tubesheets

Cold wall effect – a detrimental condition that promotes corrosion due to a temperature gradient between a vessel and its supports

| Item Number: NB16-0101 | NBIC Location: Part 1 | No Attachment |
|---|---|---|
| **General Description:** Result of NB13-1101, address carbon monoxide sensors in equipment rooms<br><br>**Subgroup:** Installation<br><br>**Task Group:** E. Wiggins (PM), G. Halley, S. Konopacki, T. Creacy, T. Millette, B. Moore, P. Schuelke, R. Smith, M. Washington<br><br>**History:** The task group is working to develop a proposal to present to the committee in January 2018. | | |

While the requirement of CO sensors in equipment rooms is generally covered by the NFPA, Fire Code, Local Building and Mechanical codes, I believe we would be remiss by not addressing this issue in the NBIC. It is my proposal to add a paragraph to **Part 1, Section 1,** to address CO sensors in equipment rooms.

1.6.X Carbon Monoxide (CO) Detector/Alarm

The owner-user shall install a carbon monoxide (CO) detector(s)/alarm(s) in equipment rooms where any boilers are located in accordance with the authority having Jurisdiction.

NB16-2801 Moore 1-11-18

NBIC Part 1 – Installation

PR16-0401, PR16-0403, PR16-0407, and PR16-0409

**Explanation**: The above listed public review comments addressed concerns about scope creep with respect to in-service inspector responsibilities. NBIC Part 1 Sections 1.6.1, 1.6.2b, 1.6.5, and 1.6.8 contain a similar phrase "…manufacturer's recommendations, and/or *{other}* industry standards as applicable…" Although the general issue in inspector responsibilities is addressed in Section 1.4.1, the commenter believes the guidance in that section needed further clarification. Note the word "other" is not used in all cases. A separate item could address the editorial inconsistency.

To address the comments, the following changes to NBIC Part 1 Section 1.4.1 c) and 1.6.8 are recommended:

**1.4.1 RESPONSIBILITY**

c) Unless otherwise specifically required by the Jurisdiction, the duties of the inservice inspector do not include the installation's compliance ~~to~~ with manufacturer's recommendations or applicability of, or compliance with, other standards and requirements (e.g., environmental, construction, electrical, undefined industry standards, etc.) for which other regulatory agencies have authority and responsibility to oversee.

**1.6.8 CHIMNEY OR STACK**

Chimneys or stacks shall be installed in accordance with jurisdictional ~~and environmental~~ requirements, manufacturer's recommendations, and/or industry standards, as applicable.

**3.5.3.1 STEAM HEATING, HOT WATER HEATING, AND HOT WATER SUPPLY BOILERS**

d) If the equipment room door is on the building exterior, the switch ~~shall~~ should be located just inside the door. If there is more than one door to the equipment room, there ~~shall~~ should be a switch located at each door of egress.

**3.5.3.2 POTABLE WATER HEATERS**

d) If the equipment room door is on the building exterior, the switch ~~shall~~ should be located just inside the door. If there is more than one door to the equipment room, there ~~shall~~ should be a switch located at each door of egress.

**S5.5.7 ELECTRICAL**

d) If the equipment room door is on the building exterior, the shutdown switch ~~shall~~ should be located just inside the door. If there is more than one door to the equipment room, there ~~shall~~ should be a shutdown switch located at each door of egress. For atmospheric-gas burners, and oil burners where a fan is on a common shaft with the oil pump, the complete burner and controls should be shut off. For power burners with detached auxiliaries, only the fuel input supply to the firebox need be shut off.

**17-147 Austin ~~7 18 17~~ 1/9/2018**

Add definition of potable water storage tank to glossary

Potable Water Storage Tank - an unfired pressure vessel used to store potable hot water at temperatures ~~less than~~ not exceeding 210°F (99°C). ~~The heat for the tank may be from an internal coil or external source.~~

Action Item 17-174 Part 2

Subject: Evaluation of existing equipment with minimal documentation

Edition 2017

## NBIC Interpretation Inquiry Request

**Inquiry: Does NBIC recognize API-510's procedure "Evaluation of Existing Equipment with Minimal Documentation" (Paragraph 7.7) for establishing maximum allowable operating conditions for equipment without nameplates, records, or stamping?**

Response to Inquirer: No

**Action Item Request**

**Code Revision or Addition: NB13-0903 to Part 2, S2.14**

The requestor, Mr Don Cook, Chief Inspector, State of California has been seeing occasions in his state where historical boilers are being fired with liquid or gaseous fuels and is asking the Committee to provide some cautionary guidance in NBIC to address these important safety issues related to that activity.

**PROPOSE:**

**New paragraph, Part 2, Supplement S2.14.16:**

**FIRING OF HISTORICAL BOILERS WITH LIQUID OR GASEOUS FUELS.**

Hand firing of historical boilers with liquid or gaseous fuels poses significant additional safety concerns beyond those encountered when firing with solid fuels for which these boilers were originally designed, such as coal, straw or wood. The cautionary notes listed below are provided as examples to remind the owner or user that additional safety concerns do exist when firing historical boilers with these alternate fuels. These notes are not meant to be all-inclusive so each boiler's fuel system should be designed appropriately.

a) JURISDICTIONAL ACCEPTANCE: The owner or user ~~should~~ shall check with the Jurisdiction as applicable to determine if this alternative firing method is allowed.
b) OWNER OR USER KNOWLEDGE: The owner or user shall have an extensive knowledge of the fuel used, fuel transfer system, on board fuel storage, burner, firing controls, emergency shut off devices and procedures.
c) PURGING: To prevent a firebox explosion, ~~it is essential to ensure that~~ the furnace ~~is~~ shall be purged of combustible gasses prior to applying the fuel ignition source. ~~to prevent flame outs.~~
d) FLAME IMPINGEMENT: Direct flame impingement of the metal surfaces within the furnace can damage the boiler. Installation of refractory or fire brick in the firebox is a common practice to prevent this potential damage.
e) LOW WATER: The owner or user ~~must~~ shall have a ~~plan and method~~procedure in place to immediately shut off the fuel supply to the burner when a boiler low water condition occurs.
f) FUEL CONTAINMENT: The fuel storage system ~~must~~ shall be suitably designed with the appropriate shut off devices for the specific fuel product. The mounting method and proximity of the fuel storage container to the furnace ~~must~~ shall be considered to prevent the fuel from accidental ignition.
g) FUEL SYSTEM: The fuel delivery system and routing from fuel source to the burner shall be suitably designed for the specific fuel product including appropriate emergency shut off devices. ~~The routing of the fuel delivery system should be a consideration as well.~~
h) FUEL AIR MIXTURE: The burner utilized shall be designed to operate within the confines of the boiler furnace and provide the proper fuel/air mixture.
i) SAFETY VALVE: The boilers minimum relieving capacity shall be computed for the type of fuel used.
j) COMPRESSED NATURAL GAS (CNG) vs LIQUID PETROLEUM GAS (LPG): CNG is lighter than air and LPG is heavier than air. The owner or user should understand the properties of the fuels to ensure the gas will not accumulate in the boiler (see Purging above).

NBIC Item NB14-901 draft Revision

# x.x.x.x INSPECTION GUIDELINES FOR METALLIC PRESSURE VESSELS

## Introduction

This section provides guidelines for inspection of metallic pressure vessels typically designed for 15 psi or greater service. The scope of inspection of these vessels should be performed to verify the integrity of the vessel for ongoing use.

## Scope

These inspection guidelines are for the inspection of metallic pressure vessels that are designed for 15 Psi or greater and would include, for example, process vessels, deaerators, air receivers and any vessel manufactured with metallic materials.

## Inspection Frequency

1. External visual inspection should be conducted annually.
2. External thickness measurements should be conducted every 3 years.
3. Internal inspection of a pressure vessel, with a manhole, should be conducted every 3 years, if operated in corrosive service. If not operated in corrosive service, every 10 years, not to exceed Jurisdictional inspection requirements.
4. Review of operations and maintenance history should be conducted every 3 years or when a pressure excursion or an unusual event occurs.

Note: A thorough assessment of a pressure vessel is performed in order to determine its actual condition and the period of time it may be safely used until the next thorough inspection. It shall include the following:

1. Internal inspection includes but not limited to surface exam of all welds, including attachments welds, surface examination of all girth and longitudinal welds and a UT thickness check using a grid pattern.

2. Assessment of the equipment's maintenance and operating history.

3. When available, review operation history process, deviations, incidents, design and process changes, and other issues that could affect the integrity of the pressure equipment.

4. For vessels with an MAWP at and above 10,000 psi, designed and constructed per ASME Section VIII, Div. 3, refer to ASME High Pressure Systems.

## Pre-Inspection Activities

A review of the known history of the pressure vessel should be performed. This should include a review of information such as:

1. Operating conditions
2. Normal contents of the vessel
3. Date of last inspection
4. ASME Code Symbol stamping or mark of code of construction.
5. The type of connections used during fabrication of the vessel to determine the proper joint efficiency to be used during stress analysis of the pressure vessel.
6. Serial number and materials of construction.
7. Records of wall thickness surveys, especially on vessels where corrosion is a consideration.

The following activities should be performed if required to support the inspection:

1. Remove inspection manhole covers
2. Clean vessel sufficiently to allow for visual inspection of internal and external surfaces.
3. Remove insulation as needed to allow access to the vessels surface.

**General External Inspection Procedure**

The type of installation given to pressure vessels should take into consideration the condition of the vessel and the environment in which it operates. This inspection may be external, internal, or both and use a variety of non-destructive examination techniques. The inspection may be performed with the vessel in service or depressurized, but should provide the necessary information that allows an adequate assessment of the pressure vessel.

A thorough inspection of a pressure vessel should include the following items:

1. External examination of the pressure vessel and associated equipment.
2. An ultrasonic thickness examination of the pressure vessel wall and dished heads and documentation for permanent record keeping.
3. An internal examination of the pressure vessel, if required. An internal examination may not be required if the pressure vessel is stamped with the original wall thickness and the thickness survey shows no loss of material. Pressure vessels in which the original wall thickness is unknown should have an initial internal examination performed to determine the baseline condition of the vessel.
4. Ultrasonic measurement, or other NDE technique, to determine the shell and dished head wall thicknesses for each pressure vessel. Other types of non-destructive examinations should be performed as required for any suspect areas identified during the external or internal examination.
5. Actual wall thickness data acquired during the ultrasonic thickness survey. These results should be compared with the manufacturer's data report.
6. A thorough inspection of the pressure relief valves and other safety devices to ensure the vessel is operating within its specified pressure range and is being adequately protected. Functional testing of the relief valves should be performed by a qualified repair organization.

7. Vessel connections, Manholes, reinforcing plates, nozzles, or other connections should be examined for cracks, deformation, or other defects. Bolts and nuts should be checked for corrosion or defects. Weep holes in reinforcing plates should remain open to provide visual evidence of leakage as well as to prevent pressure buildup between the vessel and the reinforcing plate. Accessible flange faces should be examined for distortion and to determine the condition of gasket seating surfaces.

8. The surfaces of the vessel should be checked for;
    a. Dents in a vessel are deformations caused by contact with a blunt object in such a way that the thickness of the metal is not materially impaired. In some cases, a dent can be repaired by mechanically pushing out the indentation.

    b. If any distortion is suspected or observed, the overall dimensions of the vessel should be checked to determine the extent and seriousness of the distortion.

    c. Local or general wastage from corrosion and erosion.

    d. Cuts or gouges can cause high stress concentrations and decrease the wall thickness. Depending on the extent of the defect, it may be necessary to repair the area by welding or patching. Blend grinding may be a useful method of eliminating some minor types of cuts or gouges if sufficient wall is determined to exist.

    e. The surfaces of shells and heads should be examined for possible cracks, blisters, bulges, and other evidence of deterioration, giving particular attention to the skirt and to the support attachment and knuckle regions of the heads.

    f. Welded joints and the adjacent heat affected zones should be examined for cracks or other defects. Magnetic particle and liquid penetrant examination are useful methods of examining suspect areas.

**Thickness Survey**

A thickness survey of the pressure vessels wall and dished heads should be performed and documented by a qualified NDT examiner using ultrasonic testing equipment. The ultrasonic testing equipment should be properly calibrated. The wall thickness data for each subsequent inspection should be used for comparisons to determine if any wall thinning may be taking place and compromising the factor of safety for the pressure vessel.

**Internal Inspection**

An internal inspection may be required only if the ultrasonic wall thickness data indicate that there is some wall thinning occurring or if the pressure vessel does not have a stamp indicating the original wall thickness of the shell and dished heads.

A general visual inspection is the first step in making an internal inspection. A borescope may also be used to facilitate the internal inspection of a pressure vessel. All parts of the vessel should be inspected for corrosion, erosion, hydrogen blistering, deformation, cracking, and laminations.

The following items should be reviewed:

a. Threaded connections should be inspected to ensure that an adequate number of threads are engaged. All openings leading to any external fittings or controls should be examined as thoroughly as possible to ensure they are free from obstructions.

b. Any special closures including those on autoclaves, normally termed quick actuating (quick opening) closures which are used frequently in the operation of a pressure vessel, should be checked for adequacy and wear. A check should also be made for cracks at areas of high stress concentration.

c. Where pressure vessels are equipped with removable internals, these internals need not be completely removed, provided evidence exists that deterioration in regions rendered inaccessible by the internals is not occurring to an extent that might constitute a hazard or to an extent beyond that found in more readily accessible parts of the vessel.

d. The type of corrosion (pitted or uniform), its location, and any obvious conditions should be established. Data collected for vessels in similar service will aid in locating and analyzing corrosion in the vessel being inspected. The liquid level lines, the bottom, and the shell area adjacent to and opposite inlet nozzles are often locations of most severe corrosion. Welded seams and nozzles and areas adjacent to welds are often subjected to accelerated corrosion.

**Non Destructive Testing**

Several different methods of non-destructive testing may be used to properly assess the condition of a pressure vessel. These examination techniques should be performed by experienced and qualified individuals. The type and amount of nondestructive examination should be acceptable to the inspector. Generally, some type of surface preparation will be required prior to the use of these examination methods. These examination methods include: magnetic particle examination, liquid penetrant examination, ultrasonic examination, radiography, eddy current examination, visual examination, metallographic examination, and acoustic emission.

**Inspection of Safety Device(s)**

**See NBIC Part 2, 2.5 for information on the inspection of pressure-relieving devices.**

| Staybolt Spacing in. | Actual Diameter of Corroded Iron Staybolts, in. | | | | | | | | | | | | | | | | | | | | | | |
|---|---|---|---|---|---|---|---|---|---|---|---|---|---|---|---|---|---|---|---|---|---|---|---|
| | 0.35 | 0.375 | 0.4 | 0.425 | 0.45 | 0.475 | 0.5 | 1.525 | 0.55 | 0.575 | 0.6 | 0.625 | 0.65 | 0.675 | 0.7 | 0.725 | 0.75 | 0.775 | 0.8 | 0.825 | 0.85 | 0.875 | 0.9 |
| 3.5 | 81 | 93 | 105 | 119 | 133 | 149 | 165 | 182 | 199 | 218 | 237 | 257 | 278 | 300 | 323 | 346 | 370 | 396 | 422 | 448 | 476 | 504 | 533 |
| 3.625 | 75 | 86 | 98 | 111 | 124 | 139 | 153 | 169 | 186 | 203 | 221 | 240 | 259 | 280 | 301 | 323 | 345 | 369 | 393 | 418 | 444 | 470 | 497 |
| 3.75 | 70 | 81 | 92 | 104 | 116 | 129 | 143 | 158 | 174 | 190 | 207 | 224 | 242 | 261 | 281 | 302 | 323 | 345 | 367 | 390 | 415 | 439 | 465 |
| 3.875 | 66 | 76 | 86 | 97 | 109 | 121 | 134 | 148 | 163 | 178 | 193 | 210 | 227 | 245 | 263 | 282 | 302 | 323 | 344 | 366 | 388 | 411 | 435 |
| 4 | 62 | 71 | 81 | 91 | 102 | 114 | 126 | 139 | 153 | 167 | 182 | 197 | 213 | 230 | 247 | 265 | 284 | 303 | 323 | 343 | 364 | 386 | 408 |
| 4.125 | 58 | 67 | 76 | 86 | 96 | 107 | 119 | 131 | 143 | 157 | 171 | 185 | 200 | 216 | 232 | 249 | 267 | 285 | 308 | 323 | 343 | 363 | 384 |
| 4.25 | 55 | 63 | 71 | 81 | 90 | 101 | 112 | 123 | 135 | 148 | 161 | 174 | 189 | 204 | 219 | 235 | 251 | 268 | 286 | 304 | 323 | 342 | 362 |
| 4.375 | 52 | 59 | 67 | 76 | 85 | 95 | 105 | 116 | 128 | 139 | 152 | 165 | 178 | 192 | 207 | 222 | 237 | 253 | 270 | 287 | 305 | 323 | 341 |
| 4.5 | 49 | 56 | 64 | 72 | 81 | 90 | 100 | 110 | 121 | 132 | 143 | 156 | 168 | 182 | 195 | 209 | 224 | 239 | 255 | 271 | 288 | 305 | 323 |
| 4.625 | 46 | 53 | 60 | 68 | 76 | 85 | 94 | 104 | 114 | 125 | 136 | 147 | 159 | 172 | 185 | 198 | 212 | 227 | 241 | 257 | 273 | 289 | 306 |
| 4.75 | 32 | 37 | 42 | 47 | 53 | 59 | 65 | 72 | 79 | 86 | 94 | 102 | 110 | 119 | 128 | 137 | 147 | 157 | 167 | 178 | 189 | 200 | 211 |
| 4.875 | 30 | 35 | 40 | 45 | 50 | 56 | 62 | 68 | 75 | 82 | | 97 | 105 | 113 | 121 | 130 | 139 | 149 | 159 | 169 | 179 | 190 | 201 |
| 5 | 29 | 33 | 38 | 43 | 48 | 53 | 59 | 65 | 71 | 78 | | 92 | 100 | 107 | 115 | 124 | 133 | 142 | 151 | 160 | 170 | 180 | 191 |
| 5.125 | 27 | 32 | 36 | 41 | 45 | 51 | 56 | 62 | 68 | 74 | | 88 | 95 | 102 | 110 | 118 | 126 | 135 | 144 | 153 | 162 | 172 | 182 |
| 5.25 | 26 | 30 | 34 | 39 | 43 | 48 | 53 | 59 | 65 | 71 | | 83 | 90 | 97 | 105 | 112 | 120 | 128 | 137 | 145 | 154 | 164 | 173 |
| 5.375 | 25 | 29 | 33 | 37 | 41 | 46 | 51 | 56 | 32 | 67 | 73 | 82 | 86 | 93 | 100 | 107 | 115 | 122 | 130 | 139 | 147 | 156 | 165 |
| 5.5 | 24 | 27 | 31 | 35 | | | | | | | | | | | 96 | 102 | 110 | 117 | 125 | 133 | 141 | 149 | 158 |
| 5.625 | 23 | 26 | 30 | 34 | | | | | | | | | | | 91 | 98 | 105 | 112 | 119 | 127 | 135 | 143 | 151 |
| 5.75 | 22 | 25 | 29 | 32 | | | | | | | | | | | 87 | 94 | 100 | 107 | 114 | 121 | 129 | 136 | 144 |
| 5.875 | 21 | 24 | 27 | 31 | | | | | | | | | | | 84 | 90 | 96 | 103 | 109 | 116 | 123 | 131 | 138 |
| 6 | 20 | 23 | 26 | 30 | | | | | | | | | | | 80 | 86 | 92 | 98 | 105 | 111 | 118 | 125 | 133 |
| 6.125 | 19 | 22 | 25 | 28 | | | | | | | | | | | 77 | 83 | 88 | 94 | 100 | 107 | 113 | 120 | 127 |
| 6.25 | 18 | 21 | 23 | 27 | | | | | | | | | | | 74 | 79 | 85 | 91 | 97 | 103 | 109 | 115 | 122 |
| 6.375 | 18 | 20 | 23 | 26 | | | | | | | | | | | 71 | 76 | 82 | 87 | 93 | 99 | 105 | 111 | 117 |
| 6.5 | 17 | 20 | 22 | 25 | | | | | | | | | | | 68 | 73 | 78 | 84 | 89 | 95 | 101 | 107 | 113 |
| 6.625 | 16 | 19 | 21 | 24 | | | | | | | | | | | 66 | 71 | 75 | 81 | 86 | 91 | 97 | 103 | 109 |
| 6.75 | 16 | 18 | 21 | 23 | | | | | | | | | | | 63 | 68 | 73 | 78 | 83 | 88 | 93 | 99 | 105 |
| 6.875 | 15 | 18 | 20 | 23 | | | | | | | | | | | 61 | 66 | 70 | 75 | 80 | 85 | 90 | 95 | 101 |
| 7 | 15 | 17 | 19 | 22 | 24 | 27 | 30 | 33 | 36 | 40 | 43 | 47 | 51 | 55 | 59 | 63 | 68 | 72 | 77 | 82 | 87 | 92 | 97 |

This section of the table has incorrect data. From 3.5" to 4.625" staybolt spacing and diameters of .35 to .9. The correct data for this section of the table is listed on the attached Word document.

$$P = \frac{\pi\left[\frac{d}{2}\right]^2 \cdot S}{p^2}$$

$S$ = 7,500 psi

$P$ = MAWP psi

$p$ = staybolt spacing, in.

$d$ = Minimum diameter of corroded staybolt, in.

**Table S2.10.4.1.a [US Customary Units]**
**Maximum Allowable Working Pressure on the Load Carrying Capacity of a Single Corroded Staybolt**

Add the word "Iron" between corroded and staybolt

## Corrected Table

| Staybolt Spacing, in. | Actual Diameter of Corroded Iron Staybolts, in. | | | | | | | | | | | | | | | | | | | | | | |
|---|---|---|---|---|---|---|---|---|---|---|---|---|---|---|---|---|---|---|---|---|---|---|---|
| | 0.35 | 0.375 | 0.4 | 0.425 | 0.45 | 0.475 | 0.5 | 0.525 | 0.55 | 0.575 | 0.6 | 0.625 | 0.65 | 0.675 | 0.7 | 0.725 | 0.75 | 0.775 | 0.8 | 0.825 | 0.85 | 0.875 | 0.9 |
| 3.5 | 59 | 68 | 77 | 87 | 97 | 108 | 120 | 133 | 145 | 159 | 173 | 188 | 203 | 219 | 236 | 253 | 270 | 289 | 308 | 327 | 347 | 368 | 389 |
| 3.625 | 55 | 63 | 72 | 81 | 91 | 101 | 112 | 124 | 136 | 148 | 161 | 175 | 189 | 204 | 220 | 236 | 252 | 269 | 287 | 305 | 324 | 343 | 363 |
| 3.75 | 51 | 59 | 67 | 76 | 85 | 95 | 105 | 115 | 127 | 138 | 151 | 164 | 177 | 191 | 205 | 220 | 236 | 252 | 268 | 285 | 303 | 321 | 339 |
| 3.875 | 48 | 55 | 63 | 71 | 79 | 89 | 98 | 108 | 119 | 130 | 141 | 153 | 166 | 179 | 192 | 206 | 221 | 236 | 251 | 267 | 283 | 300 | 318 |
| 4 | 45 | 52 | 59 | 66 | 75 | 83 | 92 | 101 | 111 | 122 | 133 | 144 | 156 | 168 | 180 | 194 | 207 | 221 | 236 | 251 | 266 | 282 | 298 |
| 4.125 | 42 | 49 | 55 | 63 | 70 | 78 | 87 | 95 | 105 | 114 | 125 | 135 | 146 | 158 | 170 | 182 | 195 | 208 | 222 | 236 | 250 | 265 | 280 |
| 4.25 | 40 | 46 | 52 | 59 | 66 | 74 | 82 | 90 | 99 | 108 | 117 | 127 | 138 | 149 | 160 | 171 | 183 | 196 | 209 | 222 | 236 | 250 | 264 |
| 4.375 | 38 | 43 | 49 | 56 | 62 | 69 | 77 | 85 | 93 | 102 | 111 | 120 | 130 | 140 | 151 | 162 | 173 | 185 | 197 | 209 | 222 | 236 | 249 |
| 4.5 | 36 | 41 | 47 | 53 | 59 | 66 | 73 | 80 | 88 | 96 | 105 | 114 | 123 | 133 | 143 | 153 | 164 | 175 | 186 | 198 | 210 | 223 | 236 |
| 4.625 | 34 | 39 | 44 | 50 | 56 | 62 | 69 | 76 | 83 | 91 | 99 | 108 | 116 | 125 | 135 | 145 | 155 | 165 | 176 | 187 | 199 | 211 | 223 |
| 4.75 | 32 | 37 | 42 | 47 | 53 | 59 | 65 | 72 | 79 | 86 | 94 | 102 | 110 | 119 | 128 | 137 | 147 | 157 | 167 | 178 | 189 | 200 | 211 |
| 4.875 | 30 | 35 | 40 | 45 | 50 | 56 | 62 | 68 | 75 | 82 | 89 | 97 | 105 | 113 | 121 | 130 | 139 | 149 | 159 | 169 | 179 | 190 | 201 |
| 5 | 29 | 33 | 38 | 43 | 48 | 53 | 59 | 65 | 71 | 78 | 85 | 92 | 100 | 107 | 115 | 124 | 133 | 142 | 151 | 160 | 170 | 180 | 191 |
| 5.125 | 27 | 32 | 36 | 41 | 45 | 51 | 56 | 62 | 68 | 74 | 81 | 88 | 95 | 102 | 110 | 118 | 126 | 135 | 144 | 153 | 162 | 172 | 182 |
| 5.25 | 26 | 30 | 34 | 39 | 43 | 48 | 53 | 59 | 65 | 71 | 77 | 83 | 90 | 97 | 105 | 112 | 120 | 128 | 137 | 145 | 154 | 164 | 173 |
| 5.375 | 25 | 29 | 33 | 37 | 41 | 46 | 51 | 56 | 62 | 67 | 73 | 80 | 86 | 93 | 100 | 107 | 115 | 122 | 130 | 139 | 147 | 156 | 165 |
| 5.5 | 24 | 27 | 31 | 35 | 39 | 44 | 49 | 54 | 59 | 64 | 70 | 76 | 82 | 89 | 95 | 102 | 110 | 117 | 125 | 133 | 141 | 149 | 158 |
| 5.625 | 23 | 26 | 30 | 34 | 38 | 42 | 47 | 51 | 56 | 62 | 67 | 73 | 79 | 85 | 91 | 98 | 105 | 112 | 119 | 127 | 135 | 143 | 151 |
| 5.75 | 22 | 25 | 29 | 32 | 36 | 40 | 45 | 49 | 54 | 59 | 64 | 70 | 75 | 81 | 87 | 94 | 100 | 107 | 114 | 121 | 129 | 136 | 144 |
| 5.875 | 21 | 24 | 27 | 31 | 35 | 39 | 43 | 47 | 52 | 56 | 61 | 67 | 72 | 78 | 84 | 90 | 96 | 103 | 109 | 116 | 123 | 131 | 138 |
| 6 | 20 | 23 | 26 | 30 | 33 | 37 | 41 | 45 | 49 | 54 | 59 | 64 | 69 | 75 | 80 | 86 | 92 | 98 | 105 | 111 | 118 | 125 | 133 |
| 6.125 | 19 | 22 | 25 | 28 | 32 | 35 | 39 | 43 | 47 | 52 | 57 | 61 | 66 | 72 | 77 | 83 | 88 | 94 | 100 | 107 | 113 | 120 | 127 |
| 6.25 | 18 | 21 | 24 | 27 | 31 | 34 | 38 | 42 | 46 | 50 | 54 | 59 | 64 | 69 | 74 | 79 | 85 | 91 | 97 | 103 | 109 | 115 | 122 |
| 6.375 | 18 | 20 | 23 | 26 | 29 | 33 | 36 | 40 | 44 | 48 | 52 | 57 | 61 | 66 | 71 | 76 | 82 | 87 | 93 | 99 | 105 | 111 | 117 |
| 6.5 | 17 | 20 | 22 | 25 | 28 | 31 | 35 | 38 | 42 | 46 | 50 | 54 | 59 | 64 | 68 | 73 | 78 | 84 | 89 | 95 | 101 | 107 | 113 |
| 6.625 | 16 | 19 | 21 | 24 | 27 | 30 | 34 | 37 | 41 | 44 | 48 | 52 | 57 | 61 | 66 | 71 | 75 | 81 | 86 | 91 | 97 | 103 | 109 |
| 6.75 | 16 | 18 | 21 | 23 | 26 | 29 | 32 | 36 | 39 | 43 | 47 | 51 | 55 | 59 | 63 | 68 | 73 | 78 | 83 | 88 | 93 | 99 | 105 |
| 6.875 | 15 | 18 | 20 | 23 | 25 | 28 | 31 | 34 | 38 | 41 | 45 | 49 | 53 | 57 | 61 | 66 | 70 | 75 | 80 | 85 | 90 | 95 | 101 |
| 7 | 15 | 17 | 19 | 22 | 24 | 27 | 30 | 33 | 36 | 40 | 43 | 47 | 51 | 55 | 59 | 63 | 68 | 72 | 77 | 82 | 87 | 92 | 97 |

# REPLACEMENT OF STAMPED DATA FORM, NB-136

in accordance with provisions of the *National Board Inspection Code*

1. _____ (P.O. no., job no., etc.)

2. SUBMITTED TO: _____ _____
(Name of jurisdiction)

_____
(Address)

_____
(Telephone no.)

3. SUBMITTED BY: _____
(Name of owner, user, or certificate holder)

_____
(Address)

4. _____ _____ _____
(Name of contact) (Email) (Telephone no.)

5. LOCATION OF INSTALLATION: ☐ SAME AS #3 ☐ STOCK ITEM – UNKNOWN

_____
(Name)

_____
(Address)

6. DATE INSTALLED: _____ ☐ UNKNOWN

7. MANUFACTURER: _____
(Name)

8. MANUFACTURER'S DATA REPORT ATTACHED: ☐ NO ☐ YES

9. ITEM REGISTERED WITH NATIONAL BOARD: ☐ NO ☐ YES, NB NUMBER: _____

10. ITEM IDENTIFICATION: _____ _____ _____ _____
(Type) (Mfg. serial no.) (Jurisdiction no.) (Year built)

_____ _____ SAFETY RELIEF VALVE SET AT: _____
(Dimensions) (MAWP psi) (psi)

11. PROVIDE A TRUE FACSIMILE OF THE LEGIBLE PORTION OF THE NAMEPLATE. ☐ ATTACHED

THE FOLLOWING IS A TRUE FACSIMILE OF THE LEGIBLE PORTION OF THE ITEM'S ORIGINAL NAMEPLATE (IF AVAILABLE). PLEASE PRINT. WHERE POSSIBLE, ALSO ATTACH A RUBBING OR PICTURE OF THE NAMEPLATE.

12. TRACEABILITY DOCUMENTATION – PROVIDE ANY DOCUMENTATION THAT WILL HELP THE JURISDICTION OR INSPECTOR VERIFY THE REQUESTED RE-STAMPING OR REPLACEMENT NAMEPLATE IS IN ACCORDANCE WITH THE ORIGINAL CODE OF CONSTRUCTION FOR THIS PRESSURE-RETAINING ITEM. ☐ ATTACHED

1. _____
(P.O. no., job no., etc.)

13. I REQUEST AUTHORIZATION TO REPLACE THE STAMPED DATA OR NAMEPLATE ON THE ABOVE DESCRIBED PRESSURE-RETAINING ITEM IN ACCORDANCE WITH THE RULES OF THE *NATIONAL BOARD INSPECTION CODE (NBIC).*

NAME: _____ NUMBER: _____
(Owner/Users or "R" Certificate Holder) (R Certificate Holder only)

SIGNATURE: _____ DATE: _____
(Authorized Representative)

14. BASED ON THE TRACEABILITY PROVIDED, AUTHORIZATION IS GRANTED TO REPLACE THE STAMPED DATA OR TO REPLACE THE NAMEPLATE OF THE ABOVE DESCRIBED PRESSURE-RETAINING ITEM.

SIGNATURE: _____ DATE: _____
(Authorized jurisdictional representative or inspector)

NATIONAL BOARD COMMISSION NO.: _____ JURISDICTIONAL NUMBER: _____
(if available)

15. THE FOLLOWING IS A TRUE FACSIMILE OF THE ITEM'S REPLACEMENT STAMPING OR NAMEPLATE
(must clearly state "replacement")

16. I CERTIFY THAT TO THE BEST OF MY KNOWLEDGE AND BELIEF, THE STATEMENTS IN THIS REPORT ARE CORRECT, AND THAT THE REPLACEMENT INFORMATION, DATA, AND IDENTIFICATION NUMBERS ARE CORRECT AND IN ACCORDANCE WITH THE PREVISIONS OF THE *NATIONAL BOARD INSPECTION CODE (NBIC).*

NAME: _____ NUMBER: _____
(Owner/Users or "R" Certificate Holder) (R Certificate Holder only)

SIGNATURE: _____ DATE: _____
(Authorized Representative)

17. WITNESSED BY: _____ EMPLOYER: _____
(Name of Inspector)

SIGNATURE: _____ DATE: _____ NB COMMISSION: _____
(Name of Inspector)

17-153 Acceptance Criteria for UT Thickness

**2.3.6.2 COMPRESSED AIR VESSELS**

a) Compressed air vessels include receivers, separators, filters, and coolers. Considerations of concern include temperature variances, pressure limitations, vibration, and condensation. Drain connections should be verified to be free of any foreign material that may cause plugging.

b) Inspection shall consist of the following:

1) Welds — Inspect all welds for cracking or gouging, corrosion, and erosion. Particular attention should be given to the welds that attach brackets supporting the compressor. These welds may fail due to vibration;

2) Shells/Hheads — Externally, inspect the base material for environmental deterioration and impacts from objects. Hot spots and bulges are signs of overheating and should be noted and evaluated for acceptability. Particular attention should be paid to the lower half of the vessel for corrosion and leakage. For vessels with manways or inspection openings, an internal inspection should be performed for corrosion, erosion, pitting, excessive deposit buildup, and leakage around inspection openings. UT thickness testing may be used where internal inspection access is limited or to determine actual thickness when corrosion is suspected;

a. UT Acceptance Criteria

1. For line or crevice corrosion, the depth of the corrosion shall not exceed 25% of the required wall thickness.

2. Isolated pits may be disregarded provided that their depth is not more than 50% of the required thickness of the pressure vessel wall (exclusive of any corrosion allowance), provided the total area of the pits does not exceed 7 sq. in. (4,500 sq. mm) within any 8 in. (200 mm) diameter circle, and provided the sum of their dimensions along any straight line within that circle does not exceed 2 in. (50 mm).

3. For a corroded area of considerable size, the thickness along the most critical plane of such area may be averaged over a length not exceeding 10 in. (250 mm). The thickness at the thinnest point shall not be less than 75% of the required wall thickness.

b. If the corrosion exceeds any of the above criteria, the following options are available to the owner/user.

1. The owner/user may contract with a qualified NDE organization to conduct a complete UT survey of the vessel to verify remaining vessel wall thickness.

2. The vessel shall be removed from service until the vessel is repaired by a “R” stamp holder.

3. The vessel shall be removed from service until it is rerated (alteration) to a lower MAWP by a “R” stamp holder.

4. A fitness-for service analysis is performed by a qualified organization.

5. The vessel is permanently removed from service.

3) Fittings and attachments — Inspect all fittings and attachments for alignment, support, deterioration, damage, and leakage around threaded joints. Any internal attachments such as supports, brackets, or rings shall be visually examined for wear, corrosion, erosion, and cracks;

4) Operation — Check the vessel nameplate to determine the maximum allowed working pressure and temperature of the vessel. Ensure the set pressure of the safety valve does not exceed that allowed on the vessel nameplate and determine that the capacity of the safety valve is greater than the capacity of the compressor. Ensure there is a functioning manual or automatic condensate drain; and

5) Quick-Closure Attachments — Filter-type vessels usually have one quick-type closure head for making filter changes, see NBIC Part 2, 2.3.6.5.

**Instructions for Completing the Form NB-136, *Replacement of Stamped Data Form***

Items 1-12 shall be completed by the owner, user, or "R" Stamp holder making the request.

1. Enter purchase order, job, or other identifying number used by your company if applicable.
2. The name address and phone number of the Jurisdiction, Authorized Inspection Agency (when there is no Jurisdiction) the form is being submitted to for approval.
3. Enter the name and address of your company or organization.
4. Enter the name, email, and phone number of the person who can be contacted if there are any questions concerning this request within your company or organization.
5. Enter the name and address of the location where the pressure retaining item is installed. If this is the same as number 3, check the box "same as # 3). If the pressure retaining item is being refurbished and the final installation location is unknown, check the box "Stock item, unknown".
6. Enter the date the pressure retaining item was installed. If unknown check the box "Unknown".
7. Enter the name of the manufacturer of the pressure retaining item the request is being submitted for.
8. Manufactures Data Report Attached, check the appropriate box.
9. Is the pressure retaining item registered with the National Board? Check the appropriate block. If yes provide the National Board Registration Number.
10. Provide as much information as known to help identify the pressure retaining item.
11. Provide a true facsimile of the legible part of the nameplate or stamping.
12. Attach any other documentation that helps provide tractability of the vessels to the original stamping, such as purchase orders, blueprints, inspection reports, etc.
13. Provide the name of owner or user of the pressure retaining item or "R" Stamp holder making the request. If an "R" Stamp holder, provide the "R" Stamp number. Signature of the requester and date requested.
14. To be completed by the Jurisdiction or Authorized Inspection Agencies authorized representative.

If the original manufacturer is currently in business, concurrence shall be obtained by the owner/user.

The requester shall submit the form along with any attachments to the jurisdiction where the pressure retaining item is installed for approval. If there is no jurisdiction or the pressure retaining item is a stock item, the requester shall submit the form to a National Board Commissioned inspector for approval.

After authorization, the form will be returned to the owner, user, or "R" Stamp holder who made the request. The requester is required to contact the Jurisdiction or an Authorized Inspection Agency to provide a National Board Commissioned inspector to witness the re-stamping or installation of the new name plate. If the name plate is being welded to the pressure retaining boundary of the vessel, the welding shall be done by a "R" Stamp holder. The requester will provide the new name plate or have the tools on hand to do the re-stamping in accordance with the original code of construction.

15. Once the re-stamping is completed or the new nameplate is attached the requester shall provide a true facsimile of the replacement stamping.
16. The owner, user, or “R” Stamp holder shall then complete fill in their name (and number if a “R” Stamp holder) and sign and date.
17. To be completed by the National Board Commissioned Inspector who witnessed by re-stamping or installation of the new nameplate.

    Note: Once completed the requester shall file a copy with the Jurisdiction where the pressure retaining item is installed, the National Board, and the owner or user of the vessel if the request was made by and “R” Stamp holder, and upon request to the Authorized Inspection Agency who witnessed the re-stamping or attachment of the new name plate.

**17-164**

**Part 2**
**4.3.1.2 LIQUID PRESSURE TESTING**

Test pressure should be selected or adjusted in agreement between the Inspector and owner or user.

~~The liquid test pressure shall not exceed the lesser of 150% of MAWP or test pressure established by the original code of construction.~~The test pressure shall not exceed the liquid test pressure of the original code of construction.

When a pressure relief device is left in place, test pressure should not exceed 90% of set pressure of the lowest setting pressure relief device on the pressure-retaining item to avoid damage to pressure relief devices.

Action from Main Committee Minutes:

| Item Number: NB16-2603 | NBIC Location: Part 3, Section 4 | Attachment Pages 22-23 |
|---|---|---|
| **General Description:** Change the maximum test pressure requirement when performing liquid pressure tests of repair activities.<br><br>**Subgroup:** Repairs and Alterations<br><br>**Task Group:** None assigned<br><br>**Meeting Action:** Mr. Galanes requested that Mr. Underwood report on this item. This item was previously approved by a unanimous vote of SC Repairs and Alterations. Mr. Underwood explained the rationale for the change, and read the proposed text change to the committee. The change ensures that the pressure tests do not exceed the maximum hydrostatic pressure as specified in the original code of construction. Mr. Cook requested that a new item be opened to ensure Part 2 requirements match this proposal. Mr. Vallance requested an editorial change. The proposal was approved as modified with a unanimous vote of the NBIC Committee. | | |

# NB16-2603

**7/13/17**

# Request for NBIC Part 3, Section 4 Revision

Robert V. Underwood
The Hartford Steam Boiler Inspection & Insurance Company

| | |
|---|---|
| **Purpose** | To change the maximum test pressure requirement when performing liquid pressure tests of repair and alteration activities. |
| **Scope:** | To revise paragraph 4.4.1(a)(1) and 4.4.2(a)(1) of the NBIC Part 3 to require maximum liquid test pressure be in accordance with the original construction Code. |
| **Background** | For liquid pressure testing of repairs and alterations, paragraphs 4.4.1(a)(1) and 4.4.2(a)(1) of the NBIC Part 3 require a maximum test pressure of 150% of the maximum allowable working pressure (MAWP) stamped on the pressure retaining item, as adjusted for temperature.<br><br>However, repairs and alterations of DOT vessels are required to be tested at a minimum of 150% of design pressure which makes it virtually impossible to comply with the NBIC maximum requirement.<br><br>Further, repairs and alterations to DOT ammonia transport vessels made from UHT materials require a test pressure of 200% of design pressure (49CFR 180.413(b)(6) and 177.337-16). Obviously, this is in violation of the NBIC Part 3. |

| | |
|---|---|
| | Paragraph UG-99 of ASME Section VIII, Div. 1 does not not specify a maximum test pressure for hydrostatic tests. Therefore, I am proposing to revise paragraphs 4.4.1(a)(1) and 4.4.2(a)(1) to remove the maximum test pressure of 150% of MAWP. Both paragraphs will have new wording (similar to existing paragraph 4.4.1(b) for pneumatic testing) which states test pressure shall not to exceed the maximum test pressure of the original code of construction. |
| **Proposed Revision** | See page 2 and 3 with proposed revisions. |

EXISTING WORDING IN 4.4.1(a)(1) FOR LIQUID PRESSURE TESTING

**4.4.1 TEST OR EXAMINATION METHODS APPLICABLE TO REPAIRS**

Based on the nature and scope of the repair activity, one or a combination of the following examination and test methods shall be applied to repairs and replacement parts used in repairs.

a) Liquid Pressure Test

Pressure testing of repairs shall meet the following requirements:

1) Pressure tests shall be conducted using water or other liquid medium. The test pressure shall be the minimum required to verify the leak tightness integrity of the repair, ~~but not more than 150% of the maximum allowable working pressure (MAWP) stamped on the pressure-retaining items, as adjusted for temperature.~~ When original test pressure included consideration of corrosion allowance, the test pressure may be further adjusted based on the remaining corrosion allowance.

PROPOSAL OF REVISION TO 4.4.1(a)(1)

1) Pressure tests shall be conducted using water or other liquid medium. The test pressure shall be the minimum required to verify the leak tightness integrity of the repair. The test pressure shall not exceed the maximum liquid test pressure of the original code of construction. When original test pressure included consideration of corrosion allowance, the test pressure may be further adjusted based on the remaining corrosion allowance.

EXISTING PARAGRAPH 4.4.2(a)(1) of NBIC Part 3

**4.4.2 TEST OR EXAMINATION METHODS APPLICABLE TO ALTERATIONS**

Based on the nature and scope of the alterations activity, one or a combination of the following examination and test methods shall be applied to alterations and replacement parts used in alterations.

a) Liquid Pressure Test

Pressure testing of alterations shall meet the following requirements:

1) A pressure test as required by the original code of construction shall be conducted. ~~The test pressure shall not exceed 150% of the maximum allowable working pressure (MAWP) stamped on the pressure retaining item, as adjusted for temperature.~~ When the original test pressure included consideration of corrosion allowance, the test pressure may be further adjusted based on the remaining corrosion allowance. The pressure test for replacement parts may be performed at the point of manufacture or point of installation;

PROPOSAL OF REVISION TO 4.4.2(a)(1)

1) A pressure test as required by the original code of construction shall be conducted. The test pressure shall not exceed the maximum liquid test pressure of the original code of construction. When the original test [pressure included consideration of corrosion allowance, the test pressure may be further adjusted based on the remaining corrosion allowance. The pressure test for replacement parts may be performed at the point of manufacture or point of installation.

## 2.3.6.8 INSPECTION OF PRESSURE VESSELS FOR HUMAN OCCUPANCY (PVHO's)

A pressure vessel for human occupancy (PVHO), as defined by ASME PVHO-1 is a pressure vessel that encloses a human being or animal within its pressure boundary while it is subject to internal or external pressure that exceeds a 2 psi (14 kPa) differential pressure. PVHOs include, but are not limited to submersibles, diving bells, personal transfer capsules, decompression chambers, recompression chambers, hyperbaric chambers, high altitude chambers and medical hyperbaric oxygenation facilities.

This section provides guidelines for inspection of PVHOs. Due to the many different designs and applications of PVHOs, potential failures of components or safety concerns that are not specifically covered, such as rapid decompression or fire/sparking issues should be considered.

a) General/operational

1) PVHOs should be constructed in accordance with ASME PVHO-1. This code adopts Section VIII and therefore the vessels should bear a "U" or "U2" ASME designator. Inspections may be conducted using ASME PVHO-2 for reference. PVHO-1 also has several Code Cases that address PVHOs manufactured from non-traditional materials such as various fabrics. PVHOs built under such Code Cases shall have all the documentation required by the Code Case, but may not necessarily have any related Section VIII forms.
2) Cast and ductile iron fittings are not allowed.
3) Due to the human occupancy element, a person should be in attendance to monitor the PVHO when in operation, in the event there is an accident.
4) The installation should be such that there is adequate clearance to inspect it properly. In some applications, such as underground tunneling, it may be impossible to perform a complete external inspection.

b) Internal Inspection

1) Where existing openings permit, perform a visual internal inspection of the vessel. Look for any obvious cracks and note areas that are subject to high stress such as welds, welded repairs, head-to-shell transitions, sharp interior corners, and interior surfaces opposite external attachments or supports.
2) The vessel should be free of corrosion, dents, gouges, or other damage. Special attention should be paid to areas under chamber floors and the interiors of chamber drain fittings.
3) All openings leading to external fittings or controls should be free from obstruction.
4) All exhaust inlets should be checked for the presence of fittings that prevent a chamber occupant from inadvertently blocking the opening.
5) The inlets to all chamber pressure gauge lines should be located where they either protected from possible blockage or fitted with multiple openings.
6) Chamber doors:
    a. should operate freely and smoothly. However, doors should not move on their own when released;
    b. that close/seal with pressure and which are fitted with "dogs" or other restraints to hold them in place until an initial seal is obtained, shall be fitted with features to prevent the door from maintaining a seal in the event the pressure differential on the door is reversed;
    c. should have seals that are supple, free from flat spots, cracking, etc.; and
    d. that close/seal against pressure shall have provisions as follows:
        1. Positive protection against pressurization of the vessel unless the restraint mechanism is fully engaged. This includes pressurization by back-up methods as well as primary methods; and
        2. Positive protection against release of the restraint mechanism unless pressure in the vessel is fully relieved.

c) External Inspection

1) The Inspector should closely examine the external condition of the pressure vessel for corrosion, damage, dents, gouges or other damage.
2) The lower half and the bottom portions of insulated vessels should receive special focus, as condensation or moisture may gravitate down the vessel shell and soak into the insulation, keeping it moist for long periods of time. Penetration locations in the insulation or fireproofing such as saddle supports, sphere support legs, nozzles, or fittings should be examined closely for potential moisture ingress paths. When moisture penetrates the insulation, the insulation may actually work in reverse, holding moisture in the insulation and/or near the vessel shell.
3) Insulated vessels that are run on an intermittent basis or that have been out of service require close scrutiny. In general, a visual inspection of the vessel's insulated surfaces should be conducted once per year.
4) The most common and superior method to inspect for suspected corrosion under insulation (CUI) damage is to completely or partially remove the insulation for visual inspection. The method most commonly utilized to inspect for CUI without insulation removal is by X-ray and isotope radiography (film or digital) or by real time radiography, utilizing imaging scopes and surface profilers. The real time imaging tools will work well if the vessel geometry and insulation thickness allows. Other less common methods to detect CUI include specialized electromagnetic methods (pulsed eddy current and electromagnetic waves) and long-range ultrasonic techniques (guided waves).
5) There are also several methods to detect moisture soaked insulation, which is often the beginning for potential CUI damage. Moisture probe detectors, neutron backscatter, and thermography are tools that can be used for CUI moisture screening. Proper surface treatment (coating) of the vessel external shell and maintaining weather-tight external insulation are the keys to prevention of CUI damage.
6) Couplers and doors that open with pressure:
    a. should operate freely and smoothly;
    b. should have seals that are supple, free from flat spots, cracking, etc.; and
    c. that close/seal against pressure shall have provisions as follows:
        1. Positive protection against pressurization of the vessel unless the restraint mechanism is fully engaged. This includes pressurization by back-up methods as well as primary methods; and
        2. Positive protection against release of the restraint mechanism unless pressure in the vessel is fully released.

d) Inspection of parts and appurtenances (e.g., piping systems, pressure gages, bottom drains, etc.)

1) As stated above, cast iron is not allowed on PVHOs and shall be replaced with parts fabricated with other suitable materials, in accordance with ASME Code Section II.
2) If valves or fittings are in place, check to ensure that these are complete and functional.
3) The Inspector shall note the pressure indicated by the gage and compare it with other gages on the same system. If the pressure gage is not mounted on the vessel itself, it should be ascertained that the gage is installed on the system in such a manner that it correctly indicates actual pressure in the vessel. Lines leading to chamber primary depth gauges should connect only to the depth gauge.
4) The Inspector shall verify that the vessel is provided with a drain opening.
5) The system should have a pressure gage designed for at least the most severe condition of coincident pressure in normal operation. This gage should be clearly visible to the person adjusting the setting of the pressure control valve. The graduation on the pressure gage shall be graduated to not less than 1.5 times the MAWP of the vessel.
6) Provisions should be made to calibrate pressure gages or to have them checked against a standard test gage.
7) Any vents and exhausts should be piped at least 10 ft. (3.0 m) from any air intake.

8) ~~Venting should be provided at all high points of the piping systems~~. Low points should be fitted with drains.

e) Inspection of view ports / windows

1) Each window should be individually identified and be marked in accordance with PVHO-1.
2) If there are any penetrations through windows, they must be circular and in accordance with PVHO-1 requirements.
3) Windows must be free of crazing, cracks and scratches that exceed "superficial" defects as defined by PVHO-2.
4) Windows and viewports have a maximum interval for seat/seal inspection and refurbishment. Documentation should be checked to ensure compliance with PVHO-2, Table 7.1.3.

f) Inspection of pressure relief devices

1) Pressure relief devices for chambers only must have a quick opening manual shutoff valve installed between the chamber and the pressure relief device, with a frangible seal in place, within easy access to the operator.
2) The pressure relief device shall be constructed in accordance with ASME Code Section VIII.
3) The discharge from the chamber pressure relief device ~~must~~ shall be piped outside to a safe point of discharge as determined by the Authority having Jurisdiction.
4) Rupture disks may be used only if they are in series with a pressure relief valve, or when there is less than 2 $ft^3$ (57 l) of water volume.
5) Verify that the safety valve is periodically tested either manually by raising the disk from the seat or by removing and testing the valve on a test stand.

g) Acceptance criteria

The following forms are required to be ~~completed~~ available for review:

1) ASME BPV Forms U-1, U-1A or U-2 as appropriate
~~1)~~2) PVHO-1 Form ~~PVHO-1~~ GR-1 Manufacturer's Data Report for Pressure Vessels for Human Occupancy.
3) PVHO-1 Forms VP-1 PVHO-2 Fabrication Certification for Acrylic Windows (one for each window).
4) PVHO-1 Form VP-2 Design Certification for Acrylic Windows (one for each window).
5) PVHO-2 Form VP-1 Viewport Inspection (one for each window, current within PVHO-2 requirements).
~~2)~~6) For any repaired windows, PVHO-2 Form VP-2 Acrylic Window Repair Certificate for Windows. Repaired by the User (or his Authorized Agent) or PVHO-2 Form VP-3 Acrylic Window Repair Certificate for Severely Damaged Windows.

h) All PVHOs under the jurisdiction of the U.S. Coast Guard must also comply with 46 CFR Part 197.

**PROPOSED INTERPRETATION**

| | | | | | |
|---|---|---|---|---|---|
| **Inquiry No.** | 17-173 | | | | |
| **Source** | Paul Welch - Arise, Inc. | | | | |
| **Subject** | Routine Repair, Part 3, Section 3, 3.3.2(e)(5) and Figure 3.3.4.3-b<br>Adding Handhole Ring on Pressure Side of Pressure Retaining Item | | | | |
| **Edition** | 2017 | | | | |
| **Question** | Can this be considered a Routine Repair? The scope of repair will be as described in 2017 NBIC Figure 3.3.4.3-b. Adding an elliptical handhole ring on the pressure side. The shell and ring material is SA-285 Gr. C, will be installed after removal of wasted area around handhole and deposit about 3/8" fillet weld. | | | | |
| **Reply** | TBD | | | | |
| **Committee's Question** | If acceptable to the Jurisdiction and considered appropriate by the Inspector, may adding a handhole ring as described in Part 3, Section 3, Figure 3.3.4.3-b and meeting the requirements of Part 3, Section 3, 3.3.2(e)(5) be considered a routine repair? | | | | |
| **Committee's Reply** | No. | | | | |
| **Rationale** | | | | | |
| **SC Vote** | Unanimous | No. Affirmative | No. Negative | No. Abstain | No. Not Voting |
| **NBIC Vote** | Unanimous | No. Affirmative | No. Negative | No. Abstain | No. Not Voting |
| **Negative Vote Comments** | | | | | |

**PROPOSED INTERPRETATION**

| | |
|---|---|
| **Inquiry No.** | **17-175** |
| **Source** | **Murugappan (?)** |
| **Subject** | Part 3, Section 3, Paragraph 3.3.3.d, Weld Metal Build-up, and Section 2, paragraph 2.5.3.1, Welding Method 1 |
| **Edition** | 2017 |
| **Question** | **1)** A Pressure vessel constructed of P Number 1 Group 1&2 materials to ASME Section VIII Division 1 was Post weld heat treated as nominal thickness was 60mm. Impact testing is not required. When this pressure vessel is repaired for 40mm surface weld metal build-up during service under NBIC and post weld heat treated, can it be considered ~~as~~ **a** Repair and reported ~~in~~ **on** Form R-1?<br>**2)** When this pressure vessel is repaired for 20mm surface weld metal build-up during service under NBIC and not post weld heat treated as thickness of weld repair is less than 39mm, can it be considered ~~as~~ **a** Repair and reported ~~in~~ **on** Form R-1?<br>**3**) When this pressure vessel is repaired for 40mm surface weld metal build-up during service under NBIC using Paragraph 2.5.3.1 " Welding method-1", can it still be considered ~~as~~ **a** Repair and reported ~~in~~ **on** Form R-1?<br>**4)** A Pressure vessel constructed of P Number 1 Group 1&2 materials to ASME Section VIII Division 1 was Post weld heat treated due to client/service requirements(Not a Code requirement). Impact testing is not required. When this pressure vessel is repaired for 20mm surface weld metal build-up during service under NBIC using Paragraph 2.5.3.1 " Welding method-1", can it still be considered ~~as~~ **a** Repair and reported ~~in~~ **on** Form R-1?<br>**5)** If the answer to the above question-4 is "No", Shall design Section be signed by Repair organization for alteration? |
| **Reply** | 1) Yes<br>2) Yes<br>3) Yes. Requirements of Paragraph 2.5.3 b) is to be followed.<br>4) No. It is an alteration and to be reported in Form R-2.<br>5) No. Design part need not be certified by Repair Organization. Column 7a of Form R-2 can be marked as N/A. A note on Form R-2 shall be made to indicate that it was considered as alteration as original vessel was Post weld heat treated whereas this repair was not post weld heat treated.<br>Attachment Page 5<br>Attachment |
| **Committee's Questions and Replies** | Background A:<br>A pressure vessel **that is in-service** is constructed of P-No.1 Group 1&2 materials in accordance with ASME Section VIII Div. 1 rules. Toughness testing is not required. The nominal thickness of the welded joints is 2.4 in. (60 mm). The postweld heat treatment (PWHT) of the pressure vessel was in accordance with the Section VIII Div. 1 requirements.<br>QA1: Is the application of a 1.6 in. (40mm) thick weld on the pressure vessel with PWHT in accordance with ASME Section VIII Div. 1 rules considered a repair?<br>RA1: Yes.<br>QA2: Is the application of a 0.80 in. (20mm) thick weld on the pressure vessel without PWHT as permitted by **a later edition of** ASME Section VIII Div. 1 rules, **when selected for the work planned in accordance with Part 3, 1.2 a),** considered a repair? |

| | | | | | |
|---|---|---|---|---|---|
| | RA2: Yes.<br>QA3: Is the application of a 1.6 in. (40mm) **thick** weld using an alternative welding method as described in Part 3, 2.5.3 on the pressure vessel a repair?<br>RA3: Yes<br><br>Background B ***(New Action Item 18-28):***<br>A pressure vessel is constructed of P-No. 1 Group 1 & 2 materials in accordance with ASME Section VIII Div. 1 rules. Toughness testing is not required. Postweld heat treatment (PWHT) is not required by Section VIII Div. 1 rules, but the pressure vessel is PWHT to meet contractual requirements.<br>QB1: Is the application **of PWHT for repairs required?**<br>RB1. **Contractual requirements are not addressed by the NBIC.** | | | | |
| | | | | | |
| **Rationale** | The repairs described in QA1 and 2 meet the requirements of the original Code of construction. The repair described in QA3 is an acceptable alternative to the PWHT requirements of the original Code of construction. The use of Welding Method 1 described in QB1 is an acceptable alternative to PWHT of the pressure vessel weld and is considered a repair. | | | | |
| **SC Vote** | Unanimous | No. Affirmative | No. Negative | No. Abstain | No. Not Voting |
| **NBIC Vote** | Unanimous | No. Affirmative | No. Negative | No. Abstain | No. Not Voting |
| **Negative Vote Comments** | | | | | |

**PROPOSED INTERPRETATION**

| | | | | | |
|---|---|---|---|---|---|
| **Inquiry No.** | **17-176** | | | | |
| **Source** | **Not known** | | | | |
| **Subject** | Part 3, Section 3, Repairs to a Pressure Retaining Part | | | | |
| **Edition** | 2017 | | | | |
| **Question** | Background: There is a boiler shell which requires repair to be performed. Owner wants repair to be performed under NBIC. However, the boiler shell is certified as S- PART and complete boiler is not certified. In this case, is it permitted to perform the repair under NBIC if all requirement of NBIC are met.<br><br>Question: Is it permitted to perform repair / alteration activities under NBIC on an item which is certified as PART and not complete vessel or Boiler? | | | | |
| **Reply** | TBD | | | | |
| **Committee's Question** | Is it permitted to perform a repair in accordance with the NBIC of a Part that has not yet been installed in a pressure vessel or boiler that has not been completed in accordance with the code of construction? | | | | |
| **Committee's Reply** | No. The NBIC rules for repairs do not apply to items not yet completed in accordance with the code of construction. | | | | |
| **Rationale** | **INTERPRETATION 95-05**<br><br>**Subject:** Purpose and Scope of the NBIC<br><br>1992 Edition with the 1993 Addendum<br><br>**Question:** At what point following the completion of a new power boiler, heating boiler or pressure vessel may the NBIC be used?<br><br>**Reply:** When all requirements of the construction code have been met. | | | | |
| **SC Vote** | Unanimous | No. Affirmative | No. Negative | No. Abstain | No. Not Voting |
| **NBIC Vote** | Unanimous | No. Affirmative | No. Negative | No. Abstain | No. Not Voting |
| **Negative Vote Comments** | | | | | |

**PROPOSED INTERPRETATION**

| | | | | | |
|---|---|---|---|---|---|
| **Inquiry No.** | **17-177 Use of Welding Method 6 for Tube-To-Header Welds** | | | | |
| **Source** | **Not known** | | | | |
| **Subject** | Part 3, Section 2, 2.5.3.6, Welding Method 6 | | | | |
| **Edition** | 2017 | | | | |
| **Question** | Question: Does tube to header weld as shown in ASME B&PVC Sec. I, 2015 ed. Figure PW16.1(a) for P15E materials meet the requirements of 2.5.3.6 for Welding Method 6 for no post weld heat treatment? | | | | |
| **Reply** | TBD | | | | |
| **Committee's Question** | When it is impracticable to perform postweld heat treatment, may a tube-to-header attachment weld be made using Welding Method 6 in accordance with Part3, Section 2, 2.5.3.6? | | | | |
| **Committee's Reply** | No. | | | | |
| **Rationale** | As explained in Part 3, Section 2, 2.5.3.6, use of Welding Method 6 is limited, among other things, to butt welds in tubing. The method has not been approved for use on tube-to-header welds. | | | | |
| **SC Vote** | Unanimous | No. Affirmative | No. Negative | No. Abstain | No. Not Voting |
| **NBIC Vote** | Unanimous | No. Affirmative | No. Negative | No. Abstain | No. Not Voting |
| **Negative Vote Comments** | | | | | |

**17-178 Allen 12-4-17**

**Purpose:** Code Interpretation of NBIC Part 3 (2017 Edition)

**Question 1:**
An R-Certificate holder omits post weld heat treatment (PWHT) of a vessel at the request of a client, where PWHT was performed in the original construction for service related reasons only. Is the omission of service related PWHT of the vessel considered an alteration and subject to documentation using a Form R2?

Committee Answer: Yes

Proposed Committee Wording
Question 1 – A Section VIII, Div.1 vessel was originally PWHT for service related reasons only and stamped per the original code of construction. An R Certificate Holder omits PWHT. Is the omission of PWHT of the vessel without the use of alternative weld methods in Part 3, 2.5.3 considered an Alteration?

Reply – Yes.

Question 2: A Section VIII, Div.1 vessel was originally PWHT for service related reasons only and stamped per the original code of construction. An R Certificate Holder omits PWHT. Is the omission of PWHT of the vessel with the use of alternative weld methods in Part 3, 2.5.3 considered a repair?

Reply- Yes

Rational: Reference Interpretation 95-21

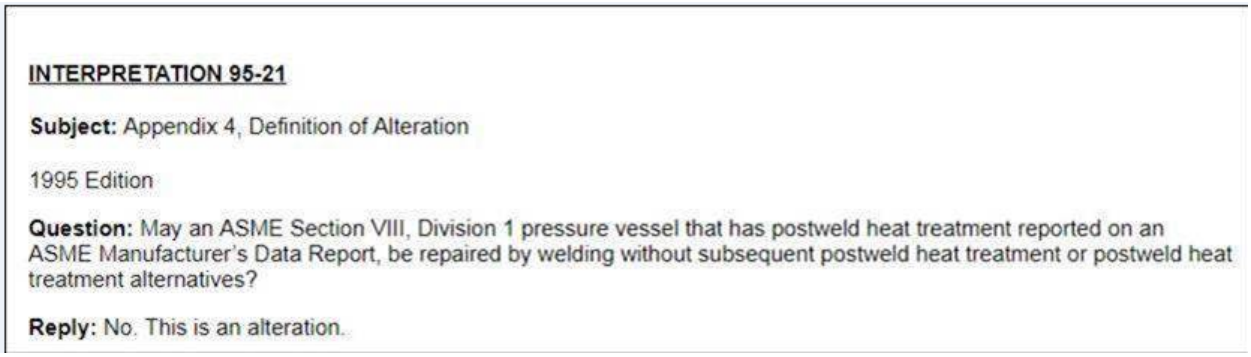

**INTERPRETATION 95-21**

**Subject:** Appendix 4, Definition of Alteration

1995 Edition

**Question:** May an ASME Section VIII, Division 1 pressure vessel that has postweld heat treatment reported on an ASME Manufacturer's Data Report, be repaired by welding without subsequent postweld heat treatment or postweld heat treatment alternatives?

**Reply:** No. This is an alteration.

**NBIC Interpretation Request**

Subject: NBIC Part 3, 3.3.5.2.a and 3.4.5.1.a, 2017 Edition - Repair/Alteration Plans for ASME VIII, Division 2, Class 1 Pressure Vessels

Question: Does the NBIC require a Repair / Alteration Plan for an ASME Section VIII, Division 2, Class 1 vessel to be certified by an engineer when the Manufacturer's Design Report was not required to be certified under the original code of construction?

Proposed Reply: No

Discussion: The 2017 Edition of ASME VIII Division 2 introduced provisions for construction of Class 1 pressure vessels. For Class 1 vessels and parts, when design rules are not provided in ASME VIII-2, Part 4, the Manufacturer is required to either perform a stress analysis in accordance with ASME VIII-2, Part 5, or with acceptance by the AI, use a recognized and accepted design-by-rule method that meets the applicable design allowable stress criteria of ASME VIII-2, Section 4.1.6. If the design cannot be performed using Part 5 or a design-by-rule method, a design method consistent with the overall design philosophy of Class 1 and acceptable to the AI is required to be used.

ASME VIII-2, Section 2.3.3.a, further establishes that a Manufacturer's Design Report for Class 1 vessels must be certified by an engineer (i.e. RPE or equivalent) when either a fatigue analysis is performed or when Part 5 is used to determine the thickness of pressure parts (i.e. when design rules are not provided in Part 4). By exclusion, requirements for certification of a Manufacturer's Design Report have been relaxed for Class 1 design conditions not addressed by Section 2.3.3.a.

By the NBIC reference to "certified by an engineer meeting the criteria of ASME Section VIII Division 2" in the subject paragraphs, a proposed Reply of "No" is offered for those ASME VIII-2, Class 1, conditions where certification of the Manufacturer's Design Report is not required under the original code of construction.

NBIC Part 3 S1.2.7.2 Patch Bolts S1.2.7.3 from S1.2.8



Revised title and section: **S1.2.7.2 TAPER THREAD BOILER STUDS (SEE NBIC PART 3, FIGURES S1.2.7.2-a, S1.2.7.2-b & S1.2.7.2-c)**

Taper thread boiler studs are designed to thread directly into the boiler shell and are used to secure locomotive boiler components or related locomotive components such as pipe brackets for boiler piping, dome cover and feed water check valves. The stud end that threads into the boiler shell is machined with a boiler-type taper thread and the mating hole in the boiler shell is tapped with the same boiler-type taper thread. The opposite end of the stud is machined with standard straight machine screw-type threads to permit attachment of the components along with a nut and washer.

Taper thread boiler studs used on locomotive boilers shall be maintained, repaired or replaced in accordance with the directions of the original equipment manufacturer. If this information is not available, the following procedures shall be used.

a) Taper thread boiler studs and the mating tapped holes shall be made to the required size and taper to create a tight and leak free joint upon final tightening. The stud taper threads shall have a good uniform fit along the entire length of the tapped hole threads and not just at the top or bottom edges of either the stud or hole. When the hole threads are to be tapped in new material or re-tapped for repair or cleaning the taper tap shall be run through the entire hole depth in order to form all threads correctly. The length of the taper thread section shall be sized so that upon the stud being tightened at final assembly at least one full thread shall be above the boiler shell exterior surface and no less than flush with the interior surface. (See Fig.S1.2.7.2-c)

b) When taper thread boiler studs are installed into blind holes on the boiler shell or sheet the taper section length shall be confirmed to be shorter than the hole depth in order to prevent the stud from contacting the hole bottom upon being tightened at final assembly.

c) Studs and boiler shell surfaces that are cracked or damaged shall be either repaired or replaced per items “f” and “g” of this section.

d) Changes to the taper, thread pitch or thread form of the taper thread boiler stud or its mating tapped hole in the boiler shall be suitable for the service intended.

e) Replacement taper thread boiler studs of a different strength, grade specification or size than the original shall be suitable for the service intended.

A worn or damaged taper thread stud hole may be repaired by re-tapping it to a larger diameter and installing a taper thread boiler stud that has a corresponding larger diameter boiler thread end than the original stud. The largest portion of the tapered section of the stud shall not exceed the original stud straight section (shank) diameter by 33%. The larger diameter boiler stud shall be made with no less than a 1/8 inch (3mm) radius from the stud body into the larger diameter boiler thread end.

f) Oversize cracked or damaged boiler studs holes in the boiler shell may be repaired by weld build-up or by replacing the damaged plate section using a flush patch. If weld build-up is performed, the existing boiler stud threads shall be removed from the hole by reaming, grinding or machining prior to welding. All welding and welded repairs shall be performed per NBIC Part 3.

1) Taper thread boiler studs, nuts and washers that have wastage, corrosion or mechanical damage, sufficient to impair the holding power or function of the fastener shall be replaced.

2) Taper thread boiler studs and nuts that have damaged threads may be repaired by re-threading.

3) Replacement taper thread boiler studs, nuts and washers shall have the same fitup, alignment and thread engagement length as the original.

4) The use of replacement taper thread boiler studs, nuts and washers of a different strength, grade specification or size than the original shall be suitable for the service intended.

Notes: If a taper thread boiler stud or nut is heated to a metal temperature that exceeds 1100°F (593°C), it will be damaged or suffer a reduction of hardness and should be replaced.

EX MPLES Or I A PhR
11I READ BOI Ll·R ·TUD



Figur SI 2.7-n

t \PI R J IIRI .\D BOii i R S i l D:-.
\RR \ (i1.D IOR I>..t I·R ,\I
CO:\IJ>O'\I '\ IASSI \tIII Y

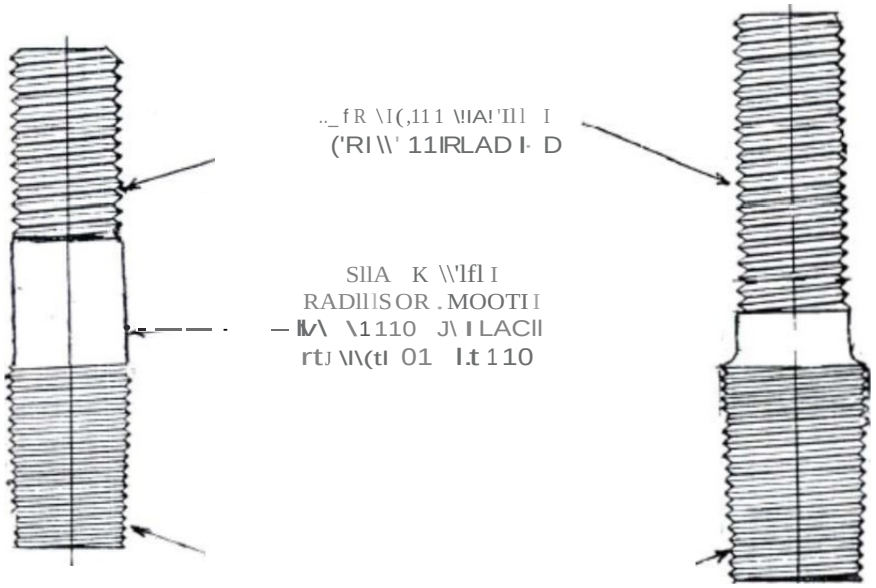

..._ f R \I(,11 1 \!IA!'Il l I
('RI \\' 11IRLAD I· D

SllA K \\'lfl I
RADlllS OR . MOOTI I
— IIv\ \1 110 J\ I LACII
rtJ \I\(tI 01 I.t 110

— IAPI R BOII I-R
l l l REAO L D

ADDITIONAL EXAMPLES OF TAPER
THREADED STUDS

Figure 12.7-b

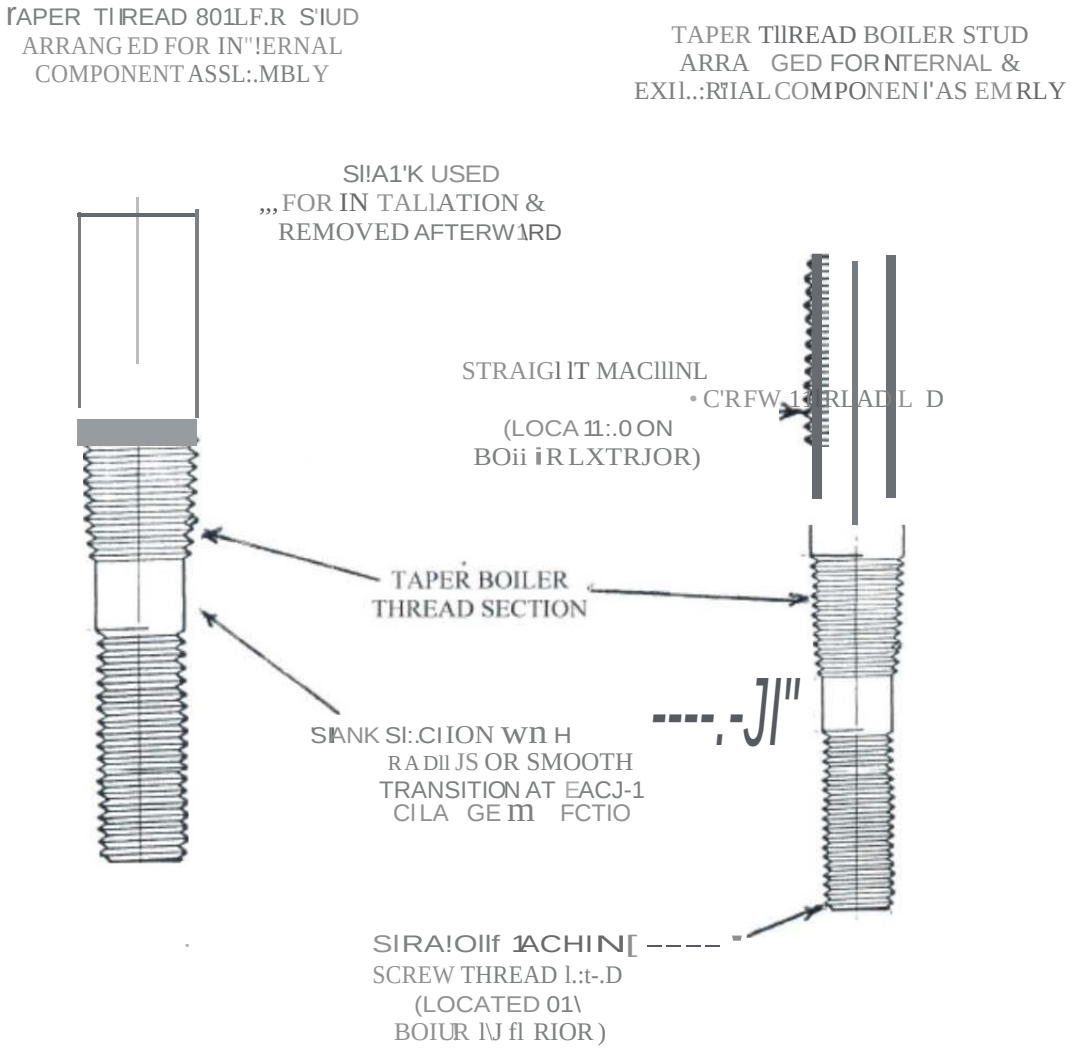

TYPICAL INSTALLATION OF
TAPER THREAD BOILER STUD
IN A THROUGH HOLE

Figure S1.2.7-c

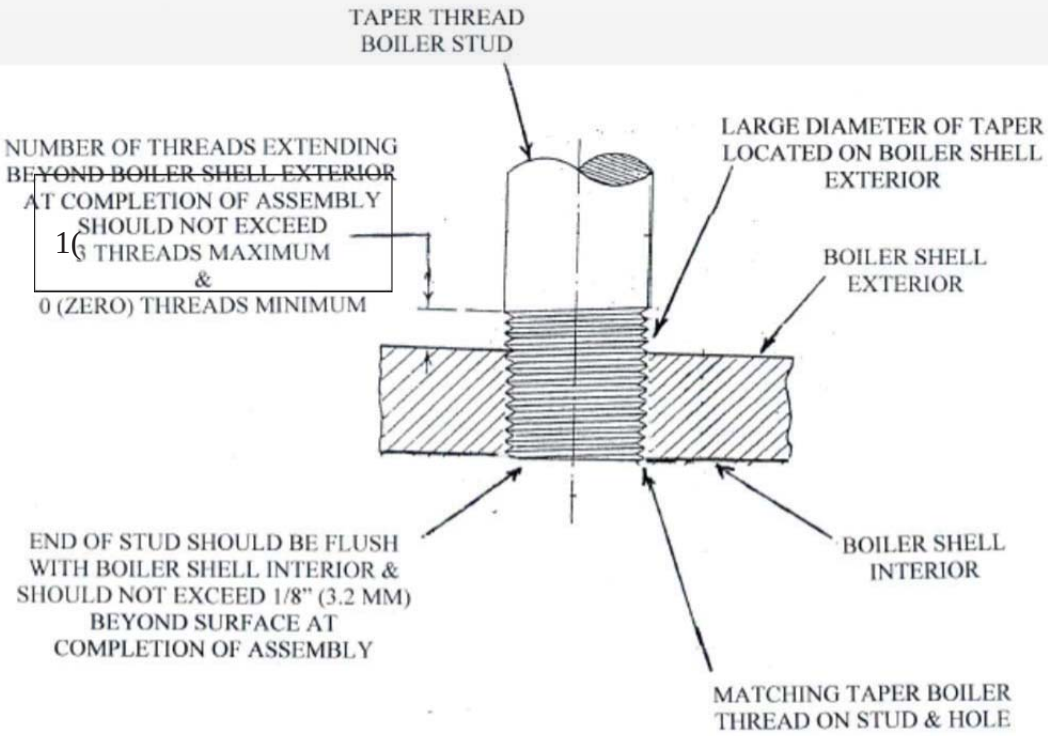

## NB15-2210 – SG Graphite – 11-14-17

### 3.1 b)

The letter “G” shall be included on the “R” Certificate of Authorization for those organizations authorized to perform repairs/alterations of graphite pressure equipment except as permitted by Part 3, S3.5.5 f).

### S3.5.5 f.)

f) As an alternative to e) any R Certificate Holder, with the concurrence of the Inspector, may install graphite tube plugs utilizing a tube plugging kit provided by an ASME Certificate Holder authorized to use the G designator. The kit shall include the following items:

1. Certified graphite plugs and certified cement ingredients, both accompanied by the appropriate documentation (Partial Data Report).
2. The qualified cementing procedure of the ASME Certificate Holder authorized to use the G designator, and a step-by-step procedural checklist that shall be followed explicitly. The procedure shall address the entire tube plugging process including plug configuration, tube hole cleaning and preparation, mixing and applying of the cement, application of the plugs, securing the plugs during the curing process, controlling the curing process, and leak testing, thereby meeting S3.3.
3. To qualify the cement technician performing the repair, additional materials shall be provided and used to prepare a demonstration plug joint prior to performing the repair. This demonstration plug joint shall be tested for integrity by a hand twist test. A successful twist test, in conjunction with the procedural checklist, shall serve as a valid cement technician certification for a single repair operation.

The R Certificate Holder shall review the material certifications including verification that the shelf life of the cement has not been exceeded, and assure that the certified cement technician has completed the qualification demonstration, and has access to the procedure and checklist. The Inspector shall review and verify that the procedure and the other elements of the certified kit, as provided by the authorized G-designated ASME Certificate Holder, have been administered and completed prior to his acceptance. The R-certificate Holder shall note on Line 8 of the R-1 Form the installation of cemented graphite tube

plugs in accordance with this section. The letter “G” shall not be applied to the vessel when performing this alternative repair. The R Certificate Holder shall identify and document the location of the plugged tubes on the R Form.

**1.6.6.2 – Quality Program Elements (Category 1)**

**l) Control of Measuring and Test Equipment**

~~The provisions identified in ASME NQA-1, Part 1, Requirement 12 shall apply.~~

~~1) The "NR" Certificate Holder may perform periodic checks on equipment to determine calibration is maintained. When periodic checks are used the method and frequency shall be included in the "NR" Certificate Holder's Quality Assurance Program and if discrepancies are found, shall be resolved to the prior periodic check.~~

~~2) The "NR" Certificate Holder may accept accreditation for calibration activities by National Voluntary Laboratory Accreditation Program (NVLAP), American Association for Laboratory Accreditation (A2LA) or other accrediting body recognized by NVLAP through the International Laboratory Accreditation Cooperation (ILAC) mutual recognition arrangement (MRA) provided the following requirements are met:~~

~~a. Accreditation is to ANSI/ISO/IEC 17025:2005 "General Requirements for the Competence of Testing and Calibration Laboratories";~~

~~b. Scope of the accreditation for the calibration laboratory covers needed measurement parameters, ranges and uncertainties;~~

~~c. "NR" Certificate Holder shall specify that calibration reports shall include, laboratory equipment/ standards used and as found and as left data;~~

~~d. The "NR" Certificate Holder shall verify conformance to the requirements of this process; and e. Utilization of this process shall be described and documented in the "NR" Certificate Holders QAM.~~

**1.6.7.2 – Quality Program Elements (Category 2)**

**l) Control of Measuring and Tests Elements**

~~Control of Measuring and Test Equipment Measures shall be established and documented to ensure that tools, gages, instruments, and other measuring and testing equipment and devices used in activities affecting quality are of the proper range, type, and accuracy to verify conformance to established requirements. A procedure shall be in effect to ensure that they are calibrated and properly adjusted at specified periods or use intervals to maintain accuracy within specified limits. Calibration shall be traceable to known national standards, where these standards exist, or with the device manufacturer's recommendation.~~

**1.6.8.2 – Quality Program Elements (Category 3)**

**l) Control of Measuring and Test Equipment**

~~Control of Measuring and Test Equipment Procedures, methods and frequency of calibration shall be described for all types of measuring and test equipment used to verify quality. Any discrepancies shall be identified and resolved.~~

1.6.6.2 l), 1.6.7.2 l), 1.6.8.2 l)

Add to Category 1, 2, and 3 the following:

The NR Certificate Holder may utilize calibration and test activities performed by subcontractors when surveys and audits are performed. As an alternative to performing a survey and audit for procuring Laboratory Calibration and Test Services, the NR Certificate Holder as documented in their Quality Program may accept accreditation of an International Calibration and Test Laboratory Services by the International Laboratory Accreditation Cooperation (ILAC) Mutual Recognition Arrangement (MRA) provided this alternative method is described in the NR Certificate Holder' Quality Program and the following requirements are met:

a) The NR Certificate Holder shall review and document verification that the supplier of calibration or test services was accredited by an accredited body recognized by the ILAC MRA encompassing ISO/IEC-17025:2005, "General Requirements for the Competence of Testing and Calibration Laboratories";
b) For procurement of calibration services, the published scope of accreditation for the calibration laboratory covers the needed measurement parameters, ranges and uncertainties.
c) For procurement of testing services, the published scope of accreditation for the test laboratory covers the needed testing services including test methodology and tolerances/uncertainty.
d) The NR Certificate Holder's purchase documents shall include:
    1) Service provided shall be in accordance with their accredited ISO/IEC-17025:2005 program and scope of accreditation;
    2) As-found calibration data shall be reported in the certificate of calibration when items are found to be out-of-calibration;
    3) Standards used to perform calibration shall be identified in the certificate of calibration;
    4) Notification of any condition that adversely impacts the laboratories ability to maintain the scope of accreditation;
    5) Any additional technical and/or quality requirements, as necessary, which may include; tolerances, accuracies, ranges, and standards.
    6) Service suppliers shall not subcontract services to any other supplier.
e) The NR Certificate Holder shall upon receipt inspection, validate that the laboratory documentation certifies that:
    1) Services provided by the laboratory has been performed in accordance with their ISO/IEC-17025:2005 program and performed within their scope; and
    2) Purchase order requirements have been met.

NB16-08-10, Comments by Webb, 6-22-17: (passed SG 1-9-18)

I absolutely endorse Mr. Edwards original thought of merely revising the example of an Alteration, Part 3, 3.4.4 e) to include the details described in accepted Committee action NB16-0810 as example-"j".

While I am not opposed to Mr. Scribner's rendering, I am more aligned to the Alternative-2 offering below as it reads closer to a revision to example "e)" as originally proposed by Mr. Edwards without displacing action NB16-0810:

e) In a boiler, Heat Recovery Steam Generator (HRSG), or Pressure Retaining Item (PRI), an increase in the steaming capacity by means of increasing heating surface, total heat input, firing rate, adjustment, or other modification to the primary or auxiliary heat source, resulting in the steaming capacity exceeding the original Manufacturer's Minimum Required Relieving Capacity (MRRC) as described on the nameplate and or Manufacturer's Data Report.

**Item Number: NB16-1302 NBIC Location: Part 3, S3.2 p)**

p) Completed repairs shall be subjected to a pressure test. The test pressure shall not be less than ~~the maximum allowable working pressure or twice the operating pressure, whichever is lower~~operating pressure or more than maximum allowable working pressure. The test pressure shall be maintained for 30 minutes minimum.

Justification:

Present pressure range requirements are excessive and cause unnecessary hardship. This action brings them more in line with the general requirements in Part 3.

Page A-6

**Item Number: NB16-1303 NBIC Location: Part 3, S3.5.1f)**

f) All damage ~~should~~ shall be examined and should be evaluated to determine the cause. Identification and elimination of the cause is essential in helping to prevent a recurrence

Page A-7

# NB17-168

# 2017 NBIC Part 3, 1.6

## 1.6 "NR" PROGRAM REQUIREMENTS

### 1.6.1 SCOPE

a) This section provides requirements that must be met for an organization to obtain a National Board *Certificate of Authorization* to use the "NR" Symbol Stamp for repair/replacement activities to nuclear items constructed in accordance with the requirements of the ASME Code or other internationally recognized codes or standards for construction or inservice inspection of nuclear facilities.

b) For administrative requirements to obtain or renew a National Board "NR" *Certificate of Authorization* and the "NR" Symbol Stamp, refer to National Board Procedure NB-417, Accreditation of "NR" Repair Organizations.

### 1.6.2 GENERAL

a) An organization applying for an "NR" *Certificate of Authorization* shall have a written Quality Assurance Program (QAP) that details the specific requirements to be met based on the intended category of activities selected by that organization as described below and shown in Table 1.6.2. Controls used, including electronic capabilities, in the Quality Assurance Program shall be documented in a Quality Assurance Manual (QAM). Controls required to be included within the QAM shall include who, what, when, where, why and how with an understanding that the how can be a reference to an implementation procedure or instruction. Quality activities to be described in the Quality Assurance Program are identified in Section 1.6.5 of this part. Applicants shall address all requirements in their Quality Assurance Program based on the category of activity and scope of work to be performed (organization's capabilities) to which certification is requested.

1) Category 1

Any ASME Code certified item or system requiring repair/replacement activities irrespective of physical location and installation status prior to fuel loading.

2) Category 2

After fuel loading, any item or system under the scope of ASME Section XI requiring repair/replacement activities irrespective of physical location. Based on regulatory or jurisdictional acceptance, Category 2 may be used prior to fuel loading.

3) Category 3

Items constructed to codes or standards other than ASME, requiring repair/replacement activities irrespective of physical location, installation status and fuel loading.

b) Repair organizations performing repairs of pressure relief devices in nuclear service shall meet the additional requirements of NBIC Part 4, Section 4 and NBIC Part 4, Supplement 6.

**TABLE 1.6.2**

"NR" QUALITY ASSURANCE PROGRAM (QAP) REQUIREMENTS

| Category of Activity | Owner | Organizations other than Owner |
|---|---|---|
| Category 1 | 10 CFR Part 50 Appendix B[1,2] and ASME Section III NCA-4000 | 10 CFR Part 50 Appendix B[1,2] and ASME Section III NCA-4000 |
| Category 2 | 10 CFR Part 50, Appendix B[1] or NQA-1, Part 1 and ASME Section XI, IWA-4142 | 10 CFR Part 50, Appendix B[1], supplemented as needed with Owner's QA program; or ASME NQA-1, Part 1; or ASME Section III, -NCA-4000 |
| Category 3 | ASME NQA-1, or Specify the Standard to which certification is desired | ASME NQA-1, or Specify the Standard to which certification is desired |
| **Note 1:** Code of Federal Regulations (CFR) – rules and regulations published by the executive departments and agencies of the federal government of the United States. | | |
| **Note 2:** 10 CFR 50 Appendix B – Title 10 of the Code of Federal Regulations Part 50 Appendix B describes the quality assurance criteria for nuclear plants and fuel reprocessing plants. | | |

### 1.6.2.1 DEFINITIONS

The NBIC terms and definitions shall be supplemented, as applicable, by the terms and definitions of ASME Section III, Section XI, NQA-1, or other standards specified by the Regulatory Authority.

The following terms are as defined in the NBIC Glossary of Terms Section 9:

a) Authorized Inspection Agency

b) Authorized Nuclear Inspection Agency

c) Jurisdiction

d) "NR" Certificate Holder

**TABLE 1.6.2.1**

ACRONYMS

| | |
|---|---|
| ASME | American Society of Mechanical Engineers |
| Applicant | An Organization applying for "NR" *Certificate of Authorization* (new or renewal) |
| CFR | Code of Federal Regulations |
| Code | ASME Code of Construction, Section III, Division I, (NCA, NB, NC, |

| | |
|---|---|
| | ND, NE, NF, NG, and NH) or ASME Section XI Rules for Inservice Inspection of Nuclear Power Plant Components as applicable. |
| Jurisdiction | Enforcement Authority |
| NB | National Board of Boiler and Pressure Vessel Inspectors |
| NBIC | National Board Inspection Code |
| NB-263, RCI-1 | Rules for Commissioned Inspectors |
| NCA | ASME Section III, Subsection NCA, General Requirements for Division 1 and Division 2 |
| NQA–1* | ASME Quality Assurance Requirements for Nuclear Facility Applications |
| NR | Nuclear Repair |
| "NR" CH | "NR" Certificate Holder |
| QA | Quality Assurance |
| QAI–1 | ASME Qualifications for Authorized Inspection |
| QAM | Quality Assurance Manual |
| QAP | Quality Assurance Program |
| QC | Quality Control |
| WA | ASME Section III, Division 3, Subsection WA, General Requirements |

**Note:**

* Latest Edition endorsed by the Regulatory Authority

### 1.6.3 PREREQUISITES FOR ISSUING A NATIONAL BOARD "NR" *CERTIFICATE OF AUTHORIZATION*

Before an organization can obtain a National Board "NR" *Certificate of Authorization*, the organization shall:

a) Have and maintain an inspection agreement with an Authorized Nuclear Inspection Agency accepted in accordance with NB-360, Criteria for Acceptance of Authorized Inspection Agencies for New Construction or accredited in accordance with NB-369, Qualifications and Duties for Authorized Inspection Agencies (AIAs) Performing Inservice Inspection Activities and Qualification of Inspectors of Boilers and Pressure Vessels.
b) Have a written Quality Assurance Program that complies with the requirements of this section and address all controls for the intended category and scope of activities.
c) Have a current edition of the NBIC.
d) Have available ASME Section XI, the code of construction and referenced code sections and standards appropriate for the scope of work to be performed. ASME Section XI and codes of construction (Editions/Addenda) shall meet the requirements of the Regulatory Authority and the owner.

### 1.6.4 OBTAINING OR RENEWING A NATIONAL BOARD "NR" *CERTIFICATE OF AUTHORIZATION*

a) Before an "NR" *Certificate of Authorization* will be issued or renewed, the applicant must have the Quality Assurance Program and the implementation of the program reviewed and found acceptable by representatives of the National Board, the Jurisdiction, and the Authorized Nuclear Inspection Agency. The Jurisdiction will be the National Board Member Jurisdiction in which the applicant is located or the location where the Quality Assurance Program is demonstrated/implemented. At the request of the Jurisdiction, or where there is no National Board Member Jurisdiction, the National Board representative shall act on behalf of the Jurisdiction. The implementation of the Quality Assurance Program shall be satisfactorily demonstrated by the organization. Demonstration of implementation shall meet the most stringent (classification) code requirements for the scope and category of work to be specified on the *Certificate of Authorization* or as requested by the applicant.

b) If the applicant is an ASME "N" type *Certificate of Authorization* holder, has satisfactorily demonstrated within the last twelve (12) months the implementation of their Quality Assurance Program and can provide documentation that the organization is capable of implementing its Quality Assurance Program as being in compliance with this section, a further hardware verification implementation may not be necessary.

c) The Regulatory Authority or Jurisdiction, upon request to the National Board, may attend the survey process for an "NR" *Certificate of Authorization* to be issued or renewed.

d) The "NR" *Certificate of Authorization* holder shall be subject to an audit annually by the Authorized Nuclear Inspection Agency to ensure compliance with the Quality Assurance Program.

### 1.6.5 QUALITY ASSURANCE PROGRAM

a) An applicant or a holder of a National Board "NR" *Certificate of Authorization* ("NR" Certificate Holder) shall have and maintain a written Quality Assurance Program. The Quality Assurance Program shall satisfactorily meet the requirements of this section, and Jurisdictional and Regulatory requirements as applicable. The Quality Assurance Program may be brief or voluminous, depending on the circumstances. It shall be treated confidentially by the National Board and available for review by the Survey Team.

b) Each applicant or "NR" Certificate Holder is responsible for establishing and executing a Quality Assurance Program. The applicant or "NR" Certificate Holder may subcontract activities needed to implement the Quality Assurance Program, as limited by ASME Section III and XI, but responsibility for adherence to the Quality Assurance Program remains with the Applicant or "NR" Certificate Holder.

c) These rules set forth the requirements for planning, managing, and implementing the organization's Quality Assurance Program to control and ensure quality is performed and maintained during repair/replacement activities of components, items, parts, and systems for nuclear facilities. These rules are to be the basis for evaluating such programs prior to the issuance or renewal of the National Board "NR" *Certificate of Authorization*. Rules identified in subsections 1.6.6, 1.6.7 and 1.6.8 of this section detail the Quality Assurance Program requirements for each category of activity. These rules are established to meet and follow the requirements specified in NBIC Part 3, Table 1.6.2-1 of this section.

### 1.6.6 QUALITY ASSURANCE PROGRAM REQUIREMENTS FOR CATEGORY 1 ACTIVITIES

#### 1.6.6.1 SCOPE

Owners or organizations other than owners shall have a written Quality Assurance Program meeting the criteria specified in Table 1.6.2 of this section for Category 1 activities. The following quality elements shall be specified and described within the QAM.

### 1.6.6.2 QUALITY PROGRAM ELEMENTS

a) Organization

The provisions identified in ASME NQA-1, Part 1, Requirement 1, shall apply in its entirety. The Authority and responsibility for individuals involved in activities affecting quality shall be clearly established and documented throughout the Quality Assurance Program and identified on a functional organizational chart contained within the QA Manual.

b) Statement of Policy and Authority shall:

1) identify the titles of individuals who have the authority and responsibility charged with ensuring the quality program is implemented as described,
2) confirm their freedom in the organization to identify quality problems and to initiate, recommend and provide solutions,
3) include a statement that if there is a disagreement in the implementation of the quality assurance program, the matter is to be referred for resolution to a higher authority and shall be resolved in a manner that will not conflict with code, jurisdiction/regulatory authority or quality program requirements
4) include a statement of the full support of management, and

5) be dated and signed by a senior management official within the organization.

c) Quality Assurance Program (QAP)

The provisions identified in ASME NQA-1, Part 1, Requirement 2, shall apply, except paragraph 301. Additionally, the following criteria shall be used when developing and maintaining the QAP.

1) The Quality Assurance Program as used in this section shall include a written Quality Assurance Manual, with supporting procedures and instructions used to meet all the requirements of this Section.
2) Qualification of non-destructive examination personnel shall be as required by the code of construction or as specified in the owner's Quality Assurance Program.
3) The "NR" Certificate Holder shall be responsible for advising the Authorized Nuclear Inspection Agency of proposed changes to the Quality Assurance Manual to obtain acceptance of the Authorized Nuclear Inspector Supervisor before putting such changes into effect. The "NR" Certificate Holder shall make a current controlled copy of the Quality Assurance Manual available to the Authorized Nuclear Inspector and Authorized Nuclear Inspector Supervisor. The Certificate Holder shall be responsible for notifying the Authorized Nuclear Inspector of QAM changes, including evidence of acceptance by the Authorized Nuclear Inspector Supervisor.
4) The Quality Assurance Manual need not be in the same format or sequential arrangement as the requirements in these rules as long as all applicable requirements have been covered.
5) The "NR" Certificate Holder shall implement and maintain a program for qualification, indoctrination, training and maintaining proficiency of personnel involved with quality functions, including personnel of subcontracted services.
6) The "NR" Certificate Holder shall address in their QAM the requirements for interfacing with the owner specified in 1.6.9 of this section.
~~6)~~7) Specified controls including responsibilities for personnel shall be described in the quality assurance program.

d) Design Control

The provisions identified in ASME NQA-1, Part 1, Requirement 3, shall apply except Paragraph 601. The following additional requirements shall be considered when applicable.

1) The "NR" Certificate Holder shall establish measures to ensure applicable requirements of the

owner's design specifications, owner's requirements, and code of construction requirements are correctly translated into drawings, specifications, procedures and instructions.

2) All design documents, including revisions, shall be verified by the "NR" Certificate Holder to be correct and adequate in accordance with the owner's requirements.
3) Repair/replacement plans shall be completed prior to performing any work, inspections, examinations or testing; however, repair/replacement plans are not required for the design phase of a repair/replacement activity including activities that require design only (except rerating).
4) The repair/replacement plan (see Table 1.6.9) shall identify any applicable Code Edition/Addenda and Code Cases, owner's requirements and the Construction Code Edition/Addenda utilized to perform the work.
5) The repair/replacement plan shall identify expected life of the item when less than the intended life as specified in the owner's design specification.
6) The "NR" Certificate Holder shall ensure that specifications, drawings, procedures and instructions do not conflict with the owner's design specifications. A system must be described in the Quality Assurance Manual to resolve or eliminate such conflicts. Resolution shall consider the Design Specification Requirements, as well as, the owner requirements, Jurisdictional and Regulatory Authority Requirements as applicable.

e) Procurement Document Control

The provisions identified in ASME NQA-1, Part 1, Requirement 4, shall apply. Procurement documents shall require suppliers to provide a Quality Assurance Program consistent with the applicable requirements of ASME Section III and this section:

f) Instructions, Procedures and Drawings

The provisions identified in ASME NQA-1, Part 1, Requirement 5, shall apply. All activities affecting quality shall be prescribed by documented instructions, procedures or drawings appropriate for the scope of work to be performed. Instructions, procedures or drawings shall describe acceptance criteria to ensure quality activities are accomplished.

g) Document Control

The provisions identified in ASME NQA-1, Part 1, Requirement 6, shall apply. The Quality Assurance Program shall detail measures to control the preparation, review, issuance, use, approval and distribution of all documents related to quality as identified in the applicants Quality Assurance Program. Revisions shall meet the same requirements as the originals unless the applicant specifies other measures within their program. Measures shall ensure the latest approved documents represent the repair/replacement activities performed.

h) Control of Purchased Material, Items, and Services

1) The provisions identified in ASME NQA-1, Part 1, Requirement 7 shall apply, except:
   a) Procurement of Authorized Inspection Agency services is not applicable as specified in paragraph 507.
   b) The decision to perform bid evaluation as described in paragraph 300 is the responsibility of the "NR" Certificate Holder.
   c) For Certificates of Conformance specified in paragraph 503 changes, waivers, or deviations including resolution of non-conformances must meet the requirements of ASME Section III and this Section.
   d) The provisions identified in ASME NQA-1, Part 1, Requirement 7, paragraph 700 are not applicable to this section.
2) Documentary evidence for items shall conform to the requirements of ASME Section III, NCA and this Section. Materials shall meet the material certification requirements as specified in ASME Section III, NCA-3800 or NCA-~~3970~~ 4470 as applicable. Documented evidence for ASME stamped items is satisfied by a Manufacturer's Data Report. Utilization of unqualified source material shall meet the requirements of ASME Section III, NCA-~~3855.5.~~4255.5

3) The “NR” Certificate Holder may obtain items from an owner, provided the owner provides the required documentation and items are identified to meet Code and the Certificate Holders Quality Assurance Program. The “NR” Certificate Holder shall not be required to audit the owner as an approved supplier, provided the items used are exclusively for the owner and the owner procured and controlled the items under the owner’s Quality Assurance Program.

4) The Quality Assurance Program shall establish controls to ensure all purchased materials, items, and services conform to the requirements of the owner’s design specifications and the code of construction Edition/Addenda used to perform the work. Materials shall meet the requirements specified in ASME Section III, NCA-3800 or NCA-~~3970~~ 4470 as applicable.

5) Add wording from NB16-0609 pending approval

~~h)~~i) Identification and Control of Items

The provisions identified in ASME NQA-1, Part 1, Requirement 8, shall apply and include the following additional requirements.

1) Controls shall assure only correct and acceptable items, parts and components are used or installed when performing repair/replacement activities.
2) Welding, brazing and fusing materials shall be identified and controlled.
3) Required Certified Material Test Reports and Certificates of Conformance shall be received, traceable to the items, reviewed to comply with the material specification and found acceptable.
4) The “NR” Certificate Holder shall utilize checklists to identify required characteristics using accepted procedures, compliance with records received, results of examinations and tests performed, range of ~~valves~~ values when required, and spaces for inclusion of document numbers and revision levels, signatures, / stamps and dates of examinations or tests performed, verified, and/or witnessed by the “NR” Certificate Holder’s qualified Representative and Authorized Nuclear Inspector.

~~i)~~j) Control of Processes

The provisions identified in ASME NQA-1, Part 1, Requirement 9, shall apply. Documents used to control processes shall include spaces for signatures, initials, stamps and dates that activities were performed by the Certificate Holder’s representative and the Authorized Nuclear Inspector when the processes conform~~s~~ to the specified acceptance criteria as listed on drawings, procedures, instructions, specifications or other appropriate documents including revisions.

~~j)~~k) Examinations, Tests and Inspections

The provisions identified in ASME NQA-1, Part 1, Requirement 10, shall apply, except paragraph 700 for inspections during operations is not required.

1) A repair/replacement plan shall be described in the Quality Assurance Manual that addresses required information to perform the work needed for repair/replacement activities. Spaces shall be included for mandatory hold points where witnessing is required by the “NR” Certificate Holder’s Qualified Representative, the Authorized Nuclear Inspector or the owner’s representative, if required. Work shall not proceed beyond designated mandatory hold points without documented consent as appropriate.
2) The following guidance is provided for information to be included within the repair/replacement plan:
   a. A detailed description of repair/replacement activities to be performed;
   b. Describe any defects and examination methods used to detect the defects;
   c. Defect removal method and requirements for identifying reference points;
   d. Any procedures including revisions utilized; (e.g. welding, brazing, heat treat, examination, testing) and material requirements;
   e. Required documentation and stamping; and
   f. Acceptance criteria used to verify acceptability.

~~f.~~g. Applicable Code editions/addenda and code cases

3) Repair/Replacement plans and evaluations shall be subject to review by the Jurisdictional and Regulatory Authority when required.

~~k)~~l) Test Control

The provisions identified in ASME NQA-1, Part 1, Requirement 11 shall apply. Testing shall be performed in accordance with written test procedures with acceptance criteria clearly defined. Pre-requisites for performing each test to include calibration, equipment, trained personnel, environmental conditions and provisions for data acquisition shall be described. Test results shall be documented and evaluated by qualified personnel.

~~l)~~m) Control of Measuring and Test Equipment

The provisions identified in ASME NQA-1, Part 1, Requirement 12 ~~-~~shall apply.

1) The "NR" Certificate Holder may perform periodic checks on equipment to determine calibration is maintained. When periodic checks are used the method and frequency shall be included in the "NR" Certificate Holder's Quality Assurance Program and if discrepancies are found, shall be resolved to the prior periodic check.
2) The "NR" Certificate Holder may accept accreditation for calibration activities by National Voluntary Laboratory Accreditation Program (NVLAP), American Association for Laboratory Accreditation (A2LA) or other accrediting body recognized by NVLAP through the International Laboratory Accreditation Cooperation (ILAC) mutual recognition arrangement (MRA) provided the following requirements are met:
   a. Accreditation is to ANSI/ISO/IEC 17025:2005 "General Requirements for the Competence of Testing and Calibration Laboratories";
   b. Scope of the accreditation for the calibration laboratory covers needed measurement parameters, ranges and uncertainties;
   c. "NR" Certificate Holder shall specify that calibration reports shall include, laboratory equipment/standards used and as found and as left data;
   d. The "NR" Certificate Holder shall verify conformance to the requirements of this process; and
   e. Utilization of this process shall be described and documented in the "NR" Certificate Holders QAM. Note: replace paragraph 2 above with NB16-0609 pending approval

~~m)~~n) Handling, Storage and Shipping

The provisions of ASME NQA-1, Part 1, and Requirement 13 shall apply.

~~n)~~o) Quality Assurance Records

The provisions identified in ASME NQA-1, Part 1, Requirement 17, shall apply, except Paragraphs 400, 500, and 600 are not applicable. The following requirements shall be followed:

1) Records shall be identifiable and retrievable;
2) Records shall be retained consistent with the owner's requirements for duration, location and assigned responsibility;
3) Forms NR-1 and NVR-1 as applicable shall be completed by the "NR" Certificate Holder upon completion of all repair/replacement activities. Completion of forms, registrations and stamping of the "NR" symbol stamp shall meet the requirements of NBIC Part 3, Section 5. A log shall be maintained in accordance with NBIC Part 3, 5.6; and
4) Lifetime and non-permanent records shall be as specified in ASME Section III, NCA-4134, Tables NCA-4134.17-1, and 4134.17-2.
5) Radiographs (digital images or film) may be reproduced provided that:
   a. The process shall be subject to owner's approval;
   b. The "NR" Certificate Holder is responsible for the process used and shall include a system for controlling and monitoring the accuracy so that the image will provide the same information as the original; and
   c. Procedures shall contain requirements for exposure scanning, focusing, contrast, resolution and distinguishing film artifacts as applicable for reproduced images.

6) Records shall be classified, maintained and indexed and shall be accessible to the owner, owner's designee, and the Authorized Nuclear Inspector.
7) When the "NR" Certificate Holder is the owner, designated records and reports received by the owner, shall be filed and maintained in a manner to allow access by the Authorized Nuclear Inservice Inspector. Suitable protection from deterioration and damage shall be provided by the owner. All records and reports shall be retained as specified in the owners QAP for the lifetime of the component or system.

~~o)~~p) Corrective Action

The provisions identified in ASME NQA-1, Part 1, Requirement 16 shall apply.

1) Measures shall be established to ensure that conditions adverse to quality such as failures, malfunctions, deficiencies, deviations, defective material and equipment, and other non-conformances are promptly identified and corrected.
2) In the case of significant conditions adverse to quality, the measures shall also ensure that the cause of these conditions be determined and corrected to preclude repetition. The identification of significant conditions adverse to quality, the cause, condition, and the corrective action taken shall be documented and reported to the appropriate levels of management.
3) These requirements shall also extend to the performance of subcontractors' corrective action measures.

~~p)~~q) Inspection or Test Status (not to include operating status)

The provisions identified in ASME NQA-1, Part 1, Requirement 14 shall apply. Measures shall be established to indicate inspection and test status of parts, items, or components during the repair/replacement activity. The system used shall provide positive identification of the part, item, or component by means of stamps, labels, routing cards, or other acceptable methods. The system shall include any procedures or instructions necessary to achieve compliance. Procedures shall be provided for the identification of acceptable and unacceptable items and for the control of status indicators. The authority for application and removal of status indicators shall also be specified.

~~q)~~r) Nonconforming Materials or Items

The provisions identified in ASME NQA-1, Part 1, Requirement 15 shall apply. Measures shall be established to control materials or items that do not conform to requirements to prevent their inadvertent use, including measures to identify and control the proper installation of items and to preclude nonconformance with the requirements of these rules These measures shall include procedures for identification, documentation, segregation when practical, and disposition. Nonconforming items shall be reviewed for acceptance, rejection, or repair in accordance with documented procedures. The responsibility and authority for the disposition of nonconforming items shall be defined. Repaired or replaced items shall be re-examined in accordance with the applicable procedures. Measures that control further processing of a nonconforming or defective item, pending a decision on its disposition, shall be established and maintained. Ultimate disposition of nonconforming items shall be documented.

~~r)~~s) Audits

The provisions identified in ASME NQA-1, Part 1, and Requirement 18 shall apply and shall include the following:

A comprehensive system of planned and periodic ~~internal~~ audits of the "NR" Certificate Holder's Quality Assurance Program shall be performed ~~by the "NR" Certificate Holder~~. Audits shall include internal audits by the Certificate Holder and audits by the Authorized Inspection Agency. Audit frequency shall be specified in the organization's Quality Assurance Manual. Audits shall be conducted at least annually for any ongoing code activity to verify compliance with Quality Assurance Program requirements, performance criteria, and to determine the effectiveness of the Quality Assurance Program. When no code work has been performed, the required annual audit need only include those areas of responsibility required to be continually maintained such as

training, audits, organizational structure, and Quality Assurance Program revisions. The Quality Assurance Manual shall as a minimum describe the following:

1) Audits shall be performed in accordance with written procedures or checklists by qualified audit personnel not having direct responsibility in areas being audited;
2) Audit personnel shall be qualified in accordance with the current requirements of ASME NQA-1;
3) Audit results shall be documented and reviewed by responsible management ;for adequacy and effectiveness of the quality assurance program.
4) Requirements for follow-up actions shall be specified for any deficiencies noted during the audit;
5) Audit records and applicable documentation shall be made available to the Authorized Nuclear Inspector for review;
6) Audit records shall include as a minimum;
   a. Written procedures;
   b. Checklists;
   c. Reports;
   d. Written replies; and
   e. Completion of corrective actions.

s)t) Authorized Nuclear Inspector

Measures shall be taken to reference the commissioned rules for National Board Authorized Nuclear Inspector, in accordance with NB-263, RCI-1 *Rules for Commissioned Inspectors*. The "NR" Certificate Holder shall ensure that the latest documents including the Quality Assurance Manual, procedures and instructions are made available to the Authorized Nuclear Inspector. The Authorized Nuclear Inspector shall be consulted prior to the issuance of a repair/replacement plan by the "NR" Certificate Holder in order that the Authorized Nuclear Inspector may select any in-process inspection or hold points when performing repair/replacement activities. The "NR" Certificate Holder shall keep the Authorized Nuclear Inspector informed of progress of the repair/replacement activity so that inspections may be performed. The Authorized Nuclear Inspector shall not sign Form NR-1 or Form NVR-1, as applicable, unless satisfied that all work carried out is in accordance with this Section. The Authorized Nuclear Inspector and Authorized Nuclear Inspector Supervisor shall have access to areas where work is being performed including subcontractors facilities in order to perform their required duties. The ANI shall be involved in dispositions and verification for non-conformances and corrective actions involving quality or code requirements.

t)u) Exhibits

Forms and exhibits referenced in the Quality Assurance Manual shall be explained in the text and included as part of the referencing document or as an appendix to the Quality Assurance Manual. Forms shall be controlled and identified to show the latest approved revision, name, and other corresponding references as stated in the Quality Assurance Manual.

## 1.6.7 QUALITY ASSURANCE PROGRAM REQUIREMENTS FOR CATEGORY 2 ACTIVITIES

### 1.6.7.1 SCOPE

Owners or organizations other than owners shall have a written Quality Assurance Program meeting one of the criteria specified in Table 1.6.2 of this section. Organizations applying for a Category 2 "NR" *Certificate of Authorization* shall specify in their written Quality Assurance Program which program criteria their Quality Assurance Program follows. Owners shall have a Quality Assurance Program meeting the requirements of either 10 CFR 50, Appendix B or NQA-1 Part 1 and shall include the additional requirements specified in ASME Section XI, IWA-4142 when applicable. Organizations other than the owner shall comply with

requirements specified in either 10 CFR 50, Appendix B supplemented as needed with the owner's QAP; NQA-1 Part 1; or NCA-4000. Organizations may elect to choose to follow all the rules specified in one of the allowed QAP criteria specified in Table 1.6.2 or they may elect to combine or supplement requirements from other specified QAP's. When organizations elect to combine QAP requirements, it shall be clearly specified and understood in the QAM which QAP requirement is being followed for each activity specified in their QAM. The following quality elements shall be specified and described within the QAM.

### 1.6.7.2 QUALITY PROGRAM ELEMENTS

a) Organization

The authority and responsibility for individuals involved in activities affecting quality shall be clearly established and documented throughout the Quality Assurance Program and identified on a functional organizational chart contained within the QA Manual.

b) Statement of Policy and Authority shall:

1) identify the titles of individuals who have the authority and responsibility charged with ensuring the quality program is implemented as described,
2) confirm their freedom in the organization to identify quality problems and to initiate, recommend and provide solutions,
3) include a statement that if there is a disagreement in the implementation of the quality assurance program, the matter is to be referred for resolution to a higher authority and shall be resolved in a manner that will not conflict with code, jurisdiction/regulatory authority or quality program requirements
4) include a statement of the full support of management, and
5) be dated and signed by a senior management official within the organization.

c) Quality Assurance Program (QAP)

1) Qualification of non-destructive examination personnel shall be as required by the code or as specified in the owner's Quality Assurance Program.
2) Prior to returning an item to service, the owner shall evaluate the suitability of the item subjected to the repair/replacement activity. Corrective actions shall be taken when an item is determined to be deficient or does not satisfy the requirements of this section.
3) The "NR" Certificate Holder shall provide a copy of the Quality Assurance Manual to the owner for review and acceptance. The "NR" Certificate Holder shall make a current controlled copy of the Quality Assurance Manual available to the Authorized Nuclear Inspector and Authorized Nuclear Inspector Supervisor. When a repair/replacement activity is split between the owner and an "NR" Certificate Holder, each Quality Assurance Program shall comply with this section for their respective activities. The owner shall establish interfaces for assuring this section is met for the two Quality Assurance Programs.
4) The "NR" Certificate Holder shall be responsible for advising the Authorized Nuclear Inspection Agency of proposed changes to the Quality Assurance Manual to obtain acceptance of the Authorized Nuclear Inspector Supervisor before putting such changes into effect. The Certificate Holder shall be responsible for notifying the Authorized Nuclear Inspector of QAM changes, including evidence of acceptance by the Authorized Nuclear Inspector Supervisor.
5) The Quality Assurance Manual need not be in the same format or sequential arrangement as the requirements in these rules as long as all applicable requirements have been covered.
6) The "NR" Certificate Holder shall implement and maintain a program for qualification, indoctrination, training and maintaining proficiency of personnel involved with quality functions, including personnel of subcontracted services.
7) The "NR" Certificate Holder shall address in their QAM the requirements for interfacing with the

owner specified in 1.6.9 of this section.

~~7)~~8) Specified controls including responsibilities for personnel shall be described in the quality assurance program.

d) Design Control

1) Repair/replacement activities, code edition and addenda used shall correspond with the owner's Inservice Inspection Program unless later code editions and addenda have been accepted by the owner, the Enforcement and/or the Regulatory authority having jurisdiction at the plant site.
2) The repair/replacement plan [see 1.6.7.2 j)] shall identify expected life of the item when less than the intended life as specified in the owner's requirements and the owner shall be advised of the condition.
3) The "NR" Certificate Holder shall assure that specifications, drawings, procedures and instructions do not conflict with the owner's requirements. A system must be described in the Quality Assurance Manual to resolve or eliminate such conflicts. Resolution shall consider the design specification requirements, as well as, the owner Requirements, Jurisdictional and Regulatory requirements as applicable.
4) ASME Section XI establishes that the owner is responsible for design in connection with repair/replacement activities. The "NR" Certificate Holder must ensure that the design specification, drawings, or other specifications or instructions furnished by the owner satisfy the code edition and addenda of the owner's requirements. To satisfy this requirement, the "NR" Certificate Holder shall establish requirements that correctly incorporate the owner's requirements into their specifications, drawings, procedures, and instructions, which may be necessary to carry out the work. The "NR" Certificate Holder's system shall include provisions to ensure that the appropriate quality standards are specified and included in all quality records. These records shall be reviewed for compliance with the owner's requirements and the requirements of ASME Section XI.

e) Procurement Document Control

Procurement documents shall require suppliers to provide a Quality Assurance Program consistent with the applicable requirements of ASME Section III, NCA and this section. Documents for procurement of materials, items, and subcontracted services shall include requirements to the extent necessary to ensure compliance with the owner's requirements and IWA-4000 of ASME Section XI. To the extent necessary, procurement documents shall require suppliers to maintain a Quality Assurance Program consistent with the applicable requirements of the edition and addenda of the code of construction to which the items are constructed. Measures shall be established to ensure that all purchased material, items, and services conform to these requirements.

f) Instructions, Procedures and Drawings

Repair/replacement plans and any verification of acceptability (evaluations) shall be subject to review by Jurisdiction and Regulatory Authorities having jurisdiction at the plant site. Activities affecting quality shall be prescribed by documented instructions, procedures or drawings of a type appropriate to the circumstances and shall be accomplished in accordance with these instructions, procedures, or drawings. Instructions, procedures, or drawings shall include appropriate quantitative and qualitative criteria for determining that activities affecting quality have been satisfactorily accomplished. The "NR" Certificate Holder shall maintain a written description of procedures, instructions, or drawings used by the organization for control of quality and examination requirements detailing the implementation of the Quality Assurance Program requirements. Copies of these procedures shall be readily available to the Authorized Nuclear Inspector and Authorized Nuclear Inservice Inspector, as applicable.

g) Document Control

The program shall include measures to control the issuance, use, and disposition of documents, such as specifications, instructions, procedures, and drawings, including changes thereto. These measures shall ensure that the latest applicable documents, including changes, are reviewed for

adequacy and approved for release by authorized personnel and distributed for use at the location where the prescribed activity is performed.

h) Control of Purchased Material, Items, and Services

Purchase of materials and small products shall meet the requirements specified in ASME Section XI, IWA 4142. Measures shall be established to ensure that purchased material, items, and services conform to the owner's requirements and applicable edition and addenda of the code of construction and ASME Section XI. These measures shall include identification for material traceability. Provisions shall be identified for source evaluation and objective evidence shall be provided evidencing quality standards for material examination upon receipt.

i) Identification and Control of Items

1) Measures shall be established for identification and control of material and items, including partially fabricated assemblies. These measures shall ensure that identification is maintained and traceable, either on the material or component, or on records throughout the repair/replacement activity. These measures shall be designed to prevent the use of incorrect or defective items and those which have not received the required examinations, tests, or inspections.
2) Identification for traceability shall be applied using methods and materials that are legible and not detrimental to the component or system involved. Such identification shall be located in areas that will not interfere with the function or quality aspects of the item.
3) Certified Material Test Reports shall be identified as required by the applicable material specification in ASME Section II and shall satisfy any additional requirements specified in the original code of construction. The Certified Material Test Report or Certificate of Compliance need not be duplicated for submission with compliance documents when a record of compliance and satisfactory reviews of the Certified Material Test Report and Certificate of Compliance is provided. Quality documents shall provide a record that the Certified Material Test Report and Certificate of Compliance have been received, reviewed, and found acceptable. When the "NR" Certificate Holder authorizes a subcontracted organization to perform examinations and tests in accordance with the original code of construction, the "NR" Certificate Holder shall certify compliance either on a Certified Material Test Report or Certificate of Compliance that the material satisfies the original code of construction requirements.

j) Control of Processes

1) The "NR" Certificate Holder shall operate under a controlled system such as process sheets, checklists, travelers, plans or equivalent procedures. Measures shall be established to ensure that processes such as welding, nondestructive examination, and heat treating are controlled in accordance with the rules of the applicable section of the ASME Code and are accomplished by qualified personnel using qualified procedures.
2) Process sheets, checklists, travelers, or equivalent documentation shall be prepared, including the document numbers and revisions to which the process conforms with space provided for reporting results of completion of specific operations at checkpoints of repair/replacement activities.

k) Examinations, Tests and Inspections

1) A repair/replacement plan shall be prepared in accordance with the Quality Assurance Program whenever repair/replacement activities are performed. As a minimum, the repair/replacement plan shall include the requirements specified in ASME Section XI, IWA-4150.
2) In-process and final examinations and tests shall be established to ensure conformance with specifications, drawings, instructions, and procedures which incorporate or reference the requirements and acceptance criteria contained in applicable design documents. Inspection, test and examination activities to verify the quality of work shall be performed by persons other than those who performed the activity being examined. Such persons shall not report directly to the immediate supervisors responsible for the work being examined.
3) Process sheets, travelers, or checklists shall be prepared, including the document numbers and revision to which the examination or test is to be performed, with space provided for recording

results.

4) Mandatory hold/inspection points at which witnessing is required by the “NR” Certificate Holder’s representative or the Authorized Nuclear Inspector/Authorized Nuclear Inservice Inspector shall be indicated in the controlling documents. Work shall not proceed beyond mandatory hold/inspection points without the consent of the “NR” Certificate Holder’s representative or the Authorized Nuclear Inspector/Authorized Nuclear Inservice Inspector, as applicable.

l) Test Control

1) Testing shall be performed in accordance with the owner’s written test procedures, or procedures acceptable to the owner, that incorporate or reference the requirements and acceptance criteria contained in applicable design documents.

2) Test procedures shall include provisions for ensuring that prerequisites for the given test have been met, that adequate instrumentation is available and used, and that necessary monitoring is performed. Prerequisites may include calibrated instrumentation, appropriate equipment, trained personnel, condition of test equipment, the item to be tested, suitable environmental conditions, and provisions for data acquisition.

3) Test results shall be documented and evaluated to ensure that test requirements have been satisfied.

m) Control of Measuring and Test Equipment

1) Measures shall be established and documented to ensure that tools, gages, instruments, and other measuring and testing equipment and devices used in activities affecting quality are of the proper range, type, and accuracy to verify conformance to established requirements. A procedure shall be in effect to ensure that they are calibrated and properly adjusted at specified periods or use intervals to maintain accuracy within specified limits. Calibration shall be traceable to known national standards, where these standards exist, or with the device manufacturer’s recommendation.

n) Handling, Storage and Shipping

Measures and controls shall be established to maintain quality requirements for handling, storage, and shipping of parts, materials, items, and components.

o) Quality Assurance Records

Documentation, reports and records shall be in accordance with ASME Section XI, IWA-6000.

1) The owner is responsible for designating records to be maintained. Measures shall be established for the “NR” Certificate Holder to maintain these records [See 1.6.7.2 n) 2)] required for Quality Assurance of repair/replacement activities. These shall include documents such as records of materials, manufacturing, examination, and test data taken before and during repair/replacement activity. Procedures, specifications, and drawings used shall be fully identified by pertinent material or item identification numbers, revision numbers, and issue dates. The records shall also include related data such as personnel qualification, procedures, equipment, and related repairs. The “NR” Certificate Holder shall take such steps as may be required to provide suitable protection from deterioration and damage for records while in his care. Also, it is required that the “NR” Certificate Holder have a system for correction or amending records that satisfies the owner’s requirements. These records may be either the original or a reproduced, legible copy and shall be transferred to the owner ~~at his~~ upon request.

2) Records to be maintained as required in NBIC Part 3, 1.6.7.2 n) 1) above shall include the following, as applicable:

a. An index that details the location and individual responsible for maintaining the records;

b. Manufacturer’s Data Reports, properly executed, for each replacement component, part, appurtenance, piping system, and piping assembly, when required by the design specification or the owner;

c. The required as-constructed drawings certified as to correctness;

d. Copies of applicable Certified Material Test Reports and Certificates of Compliance;

e. As-built sketch(es) including tabulations of materials repair/replacement procedures, and instructions to achieve compliance with ASME Section XI;

f. Nondestructive examination reports, including results of examinations, shall identify the name and certification level of personnel interpreting the examination results. Final radiographs shall be included where radiography has been performed. Radiographs may be microfilmed or digitally reproduced in accordance with the requirements listed in ASME Section V, Article 2, Mandatory Appendix VI. The accuracy of the reproduction process shall be verified and monitored for legibility, storage, retrievability and reproduction quality;

g. Records of heat treatments may be either the heat treatment charts or a summary description of heat treatment time and temperature data certified by the "NR" Certificate Holder. Heat treatments performed by the material manufacturer to satisfy requirements of the material specifications may be reported on the Certified Material Test Report; and

h. Nonconformance reports shall satisfy IWA-4000 of ASME Section XI and shall be reconciled by the owner prior to certification of the Form NR-1 or NVR-1, as applicable.

3) After a repair/replacement activity, all records including audit reports required to verify compliance with the applicable engineering documents and the "NR" Certificate Holder's Quality System Program, shall be maintained at a place mutually agreed upon by the owner and the "NR" Certificate Holder. The "NR" Certificate Holder shall maintain records and reports for a period of five years after completion of the repair/replacement activity.

4) When the "NR" Certificate Holder is the owner, designated records and reports received by the owner, shall be filed and maintained in a manner to allow access by the Authorized Nuclear Inservice Inspector. Suitable protection from deterioration and damage shall be provided by the owner. These records and reports shall be retained as specified in the owners QAP for the lifetime of the component or system.

5) The original of the completed Form NR-1 or Form NVR-1, as applicable, shall be registered with the National Board and, if required, a copy forwarded to the Jurisdiction where the nuclear power plant is located. A log shall be maintained in accordance with NBIC Part 3, 5.6.

p) Corrective Action

1) Measures shall be established to ensure that conditions adverse to quality such as failures, malfunctions, deficiencies, deviations, defective material and equipment, and other nonconformances are promptly identified, controlled and corrected.

2) In the case of significant conditions adverse to quality, the measures shall also ensure that the cause of these conditions be determined and corrected to preclude repetition. The identification of significant conditions adverse to quality, the cause, condition, and the corrective action taken shall be documented and reported to the appropriate levels of management.

3) Corrective action requirements shall also extend to the performance of subcontractors' activities.

q) Inspection or Test Status (not to include operating status)

Measures shall be established to indicate examination and test status of parts, items, or components during the repair/replacement activity. The system used shall provide positive identification of the part, item, or component by means of stamps, labels, routing cards, or other acceptable methods. The system shall include any procedures or instructions necessary to achieve compliance. Also, measures shall be provided for the identification of acceptable and unacceptable items. They shall also include procedures for control of status indicators, including the authority for application and removal of status indicators.

r) Nonconforming Materials or Items

Measures shall be established to control materials or items that do not conform to specified requirements to prevent their inadvertent use, including measures to identify and control the proper installation of items and to preclude nonconformance with the requirements of these rules. These measures shall include procedures for identification, documentation, segregation, and disposition.

Nonconforming items shall be reviewed for acceptance, rejection, or repair in accordance with documented procedures. The responsibility and authority for the disposition of nonconforming items shall be defined. Repaired/replaced or altered items shall be re-examined in accordance with the applicable procedures.

Measures that control further processing of a nonconforming or defective item, pending a decision on its disposition, shall be established and maintained. Ultimate disposition of nonconforming items shall be documented.

s) Audits

A comprehensive system of planned and periodic ~~internal~~ audits of the "NR" Certificate Holder's Quality Assurance Program shall be performed ~~by each organization~~,. Audits shall include internal audits by the Certificate Holder and audits by the Authorized Inspection Agency. Audit frequency shall be specified in the organization's Quality Assurance Manual. Audits shall be conducted at least annually to verify compliance with Quality Assurance Program requirements, performance criteria and to determine the effectiveness of the Quality Assurance Program. When no code work has been performed, the required annual audit need only include those areas of responsibility required to be continually maintained such as training, audits, organizational structure, Quality Assurance Program revisions, etc. The Quality Assurance Manual shall as a minimum describe the following:

1) Audits shall be performed in accordance with written procedures or checklists by qualified audit personnel not having direct responsibility in areas being audited;
2) Audit personnel shall be qualified in accordance with the current requirements of NQA-1;
3) Audit results shall be documented and reviewed by responsible management for adequacy and effectiveness of the quality assurance program~~;~~
4) Requirements for follow-up actions for any deficiencies noted during the audit;
5) Audit records and applicable documentation shall be made available to the Authorized Nuclear Inspector for review;
6) Audit records shall include as a minimum:
   a. written procedures;
   b. checklists;
   c. reports;
   d. written replies; and
   e. completion of corrective actions.

t) Authorized Nuclear Inspector

Measures shall be taken to reference the commissioned rules for National Board Authorized Nuclear Inspector, in accordance with NB-263, RCI-1 *Rules for Commissioned Inspectors*. The "NR" Certificate Holder shall ensure that the latest documents including the Quality Assurance Manual, procedures and instructions are made available to the Authorized Nuclear Inspector. The Authorized Nuclear Inspector shall be consulted prior to the issuance of a repair/replacement plan by the "NR" Certificate Holder in order that the Authorized Nuclear Inspector may select any in process inspection or hold points when performing repair/replacement activities. The "NR" Certificate Holder shall keep the Authorized Nuclear Inspector informed of progress of the repair/replacement activity so that inspections may be performed. The Authorized Nuclear Inspector shall not sign Form NR-1 or Form NVR-1, as applicable, unless satisfied that all work carried out is in accordance with this section. The Authorized Nuclear Inspector and Authorized Nuclear Inspector Supervisor shall have access to areas where work is being performed including subcontractors facilities in order to perform their required duties. The ANI shall be involved in dispositions and verification for nonconformances and corrective actions involving quality or code requirements.

u) Exhibits

Forms and exhibits referenced in the Quality Assurance Manual shall be explained in the text and included as part of the referencing document or as an appendix to the Quality Assurance Manual. Forms shall be controlled and identified to show the latest approved revision, name, and other corresponding references as stated in the Quality Assurance Manual.

## 1.6.8 QUALITY ASSURANCE PROGRAM REQUIREMENTS FOR CATEGORY 3 ACTIVITIES

### 1.6.8.1 SCOPE

Organizations requesting a Category 3 "NR" *Certificate of Authorization* may elect to follow the requirements specified in ASME NQA-1 Part 1 or follow specific Quality Assurance Program requirements outlined in other specified standards as required by the owner, Regulatory Authority or Jurisdiction. Organizations shall specify in the QAM what QAP requirements are followed. When standards other than ASME NQA-1 are followed, the organization shall have available a copy of that standard for review by the NB Survey Team and the ANIA, as applicable. Each organization shall, as a minimum, include in their written QAM the specified elements listed in Category 1 and/or 2 (1.6.6, 1.6.7) QAP requirements. Additional requirements, as specified within NBIC Part 3, 1.6.8 and 1.6.9 shall be included within the QAP. Also, limitations or additions to ASME NQA-1, as ~~–~~specified for Category 1 or 2 may be incorporated and referenced within the QAM.

### 1.6.8.2 QUALITY PROGRAM ELEMENTS

a) Organization

~~Persons and organization shall have authority and freedom to identify quality problems; initiate, recommend or provide solutions and verify implementation of solutions.~~ The authority and responsibility for individuals involved in activities affecting quality shall be clearly established and documented throughout the Quality Assurance Program and identified on a functional organizational chart contained within the QA Manual.

b) Statement of Policy and Authority shall:

1) identify the titles of individuals who have the authority and responsibility charged with ensuring the quality program is implemented as described,
2) confirm their freedom in the organization to identify quality problems and to initiate, recommend and provide solutions,
3) include a statement that if there is a disagreement in the implementation of the quality assurance program, the matter is to be referred for resolution to a higher authority and shall be resolved in a manner that will not conflict with code, jurisdiction/regulatory authority or quality program requirements
4) include a statement of the full support of management, and
5) be dated and signed by a senior management official within the organization.

c) QAP

The quality assurance program shall be documented by written policies, procedures and instructions. It s~~S~~hall account for special controls, processes, test equipment, tools and skills to obtain quality and for verification of quality by inspections and tests. Indoctrination, training and maintaining proficiency of personnel effecting quality shall be described. The status, ~~and~~ adequacy and effectiveness of the QAP shall be regularly reviewed by management. ~~.~~ The scope shall be included within the written QAM. The "NR" Certificate Holder shall make a current controlled copy

of the Quality Assurance Manual available to the Authorized Nuclear Inspector and Authorized Nuclear Inspector Supervisor. The “NR” Certificate Holder shall address in their QAM the requirements for interfacing with the owner specified in 1.~~8~~6.9 of this section. Specified controls including responsibilities for personnel shall be described in the quality assurance program.

d) Design Control

Established measures to assure ~~approximate~~ applicable quality standards and regulatory requirements are accurately specified and translated ~~included~~ into design documents. Any deviations shall be identified and controlled. Control measures (such as review, approval, release, distribution and revisions) for suitability of materials, parts, equipment, procedures, instructions and processes, shall be performed to ensure adherence to specified design basis requirements. Qualifications, responsibilities and certifications of design personnel shall be clearly defined within the quality assurance program.

e) Procurement Document Control

Documents for procurement of material, equipment and services shall ensure regulatory requirements, design bases and other quality requirements ~~and~~ are included or referenced. Procurement documents shall require contractors or subcontractors provide a Quality Assurance Program consistent with the provisions specified herein. ~~in this NBIC Part 3, 1.8.8.~~ Controls necessary to ensure materials, equipment, and services meet specified design criteria shall be clearly described within the quality assurance program.

f) Instructions, Procedures and Drawings

Activities affecting quality shall be accomplished in accordance with prescribed instructions, procedures or drawings and shall include ~~approximate~~ appropriate quantitative or qualitative ~~qualified~~ acceptance criteria to determine activities are satisfactorily accomplished.

g) Document Control

Shall define measures to control the preparation, issuance, use, review, approval, revisions and distribution of all documents, including procedures, instructions and drawings related to quality. Responsibilities shall be described within the quality program.

h) Control of Purchase~~d~~s, Materials, Items and Services

Purchased material, items and services shall conform to the procurement documents. Measures shall be established for source evaluation and selection, objective evidence of quality, inspections at the source and examination of products upon delivery. Effectiveness of quality of suppliers shall be assessed by the applicant or designee at specified intervals. Documented evidence shall be performed and made available to assure materials and services conform to procurement documents, quality procedures and instructions.

i) Identification and Control of Items

Specified controls shall ensure only correct and acceptable items, parts and components are used and installed and traceable to required documents such as certified material test reports, certificates of conformance, or data reports. These controls shall include traceability on the items or on records traceable to the items during fabrication and final acceptance and test.

j) Control of Processes

Documents used to control processes shall be prepared, including the document numbers and revision to which the process conforms and ~~conform to specified acceptance criteria~~ shall include space for providing reporting of results of specific operations at checkpoints of repair/replacement activity, and provide for signatures, initials, stamps and dates for activities performed by the Certificate Holders’ representative and the Authorized Nuclear Inspector. Special processes

including welding, nondestructive examinations, heat treating, and bending are performed using qualified and approved procedures and qualified personnel in accordance with applicable codes, standards and other specified criteria.

k) Examinations, Tests and Inspections

A repair / replacement plan, developed in accordance with Table 1.6.9, shall address all required information for performing examinations, tests and inspections including but not limited to:

1) Establishing hold points

2) Identifying procedures, methods, acceptance criteria

3) Defects identified, removal methods, welding, brazing, fusing, and material requirements, reference points used for identification

4) Evaluations of results

Examinations, tests and inspections shall be performed using trained and qualified personnel. Personnel records for qualification and training shall be available for review.

l) Test Control

Tests shall be performed using~~to~~ written procedures identifying prerequisites, acceptance limits, calibration, equipment, personnel qualifications, environmental conditions, and required documentation. ~~required.~~ Personnel responsibilities shall be described for performance, acceptance/inspection and documenting results.

m) Control of Measuring and Test Equipment

Procedures, methods and frequency of calibration shall be described for all types of measuring and test equipment used to verify quality. Controls shall ensure accuracy within specified limits. Any discrepancies shall be identified and resolved.

n) Handling, Storage and Shipping

Processes or procedures shall be established to prevent damage, deterioration or misuse of material, items or components used and stored. Controls for handling, shipping, storage, cleanliness and preservation shall be specified in the quality program.

o) Records

1) All quality related records shall be classified, identified, verified, maintained, distributed~~, retraceable,~~ retrievable and accessible. When the “NR” Certificate Holder is the owner, designated records and reports received by the owner, shall be filed and maintained in a manner to allow access by the Authorized Nuclear Inservice Inspector (ANII). Suitable protection from deterioration and damage shall be provided by the owner. These records and reports shall be retained as specified in the owner’s QAP for the lifetime of the component or system. Records to support evidence of activities affecting quality shall include as applicable:

a. Inspections and acceptance criteria/results

b. Tests performed and supporting reports

c. Procedures/instructions

d. Qualification of personnel, procedures, and equipment

e. Types of observations and results

f. Audits,

g. Nonconformances, and;

h. Corrective actions

~~1)~~2) ~~T~~The original of the completed Form NR-1 or Form NVR-1, as applicable, shall be registered with the National Board and, if required, a copy forwarded to the Jurisdiction where the nuclear power plant is located. A log for registration shall be maintained in accordance with NBIC Part 3, 5.6.

p) Corrective Action

1) Measures shall be established to ensure that conditions adverse to quality such as failures, malfunctions, deficiencies, deviations, defective material and equipment, and other non-conformances are promptly identified and corrected.
2) In the case of significant conditions adverse to quality, the measures shall also ensure that the cause of these conditions be determined and corrected to preclude repetition. The identification of significant conditions adverse to quality, the cause, condition, and the corrective action taken shall be documented and reported to the appropriate levels of management.
3) Corrective action requirements shall also extend to the performance of subcontractors' activities.

~~Measures established to assure conditions adverse to quality are promptly identified and corrected and action taken to preclude repetition.~~

q) Inspection or Test Status

Measures shall be established to indicate inspection and test status of parts, items or components during repair/replacement activity. Measures shall include identification, procedures, control indicators (acceptable, unacceptable) and responsibility of personnel.

r) Nonconforming Material or Items

Measures to control material or items, nonconforming to specified criteria shall be established. Measures shall include identifying, controlling, documenting, reviewing, verifying, dispositioning and segregation when practical.

s) Audits

~~A system of planned and periodic audits shall be established to verify compliance of the Quality Assurance Program. Audits shall include; written procedures, checklists, trained/qualified personnel not having direct responsibility for areas being audited, documentation, review by management and follow-up actions when required.~~ A comprehensive system of planned and periodic audits of the "NR" Certificate Holder's Quality Assurance Program shall be performed. Audits shall include internal audits by the Certificate Holder and audits by the Authorized Inspection Agency. Audit frequency shall be specified in the organization's Quality Assurance Manual. Audits shall be conducted at least annually to verify compliance with Quality Assurance Program requirements, performance criteria and to determine the effectiveness of the Quality Assurance Program. When no code work has been performed, the required annual audit need only include those areas of responsibility required to be continually maintained such as training, audits, organizational structure, Quality Assurance Program revisions, etc. The Quality Assurance Manual shall as a minimum describe the following:

1) Audits shall be performed in accordance with written procedures or checklists by qualified audit personnel not having direct responsibility in areas being audited;
2) Audit personnel shall be qualified in accordance with recognized standards, such as NQA-1;
3) Audit results shall be documented and reviewed by responsible management for adequacy and effectiveness of the quality assurance program

4) Requirements for follow-up actions for any deficiencies noted during the audit;
5) Audit records and applicable documentation shall be made available to the Authorized Nuclear Inspector for review;
6) Audit records shall include as a minimum:
   a. written procedures;
   b. checklists;
   c. reports;
   d. written replies; and
   e. completion of corrective actions.

t) Authorized Nuclear Inspector

Qualifications and duties shall be as specified in ASME QAI-1 and NB-263, RCI-1 for the Authorized Inspection Agencies, Authorized Nuclear Inspector and the Authorized Nuclear Inspector Supervisor. ~~for the Authorized Inspection Agencies, Authorized Nuclear Inspector and the Authorized Nuclear Inspector Supervisor.~~ Additional requirements are specified in Sections 1.~~8~~6.6.2 s), 1.~~8~~6.7.2 s), and 1.6~~8~~.9.

u) Exhibits

Quality related forms and exhibits described in the Quality Assurance Program shall be identified, controlled and where applicable included as a reference document within the QAM or referenced procedures.

## 1.6.9 INTERFACE WITH THE OWNER'S REPAIR/REPLACEMENT PROGRAM (FOR CATEGORIES 1, 2, AND 3 AS APPLICABLE)

Interface with the owner's repair/replacement program shall meet the following:

a) The "NR" Certificate Holder's repair/replacement plan (see Table 1.6.9) shall be subject to the acceptance of the owner and the owner's Authorized Nuclear Inservice Inspector (ANII) and shall be subject to review by the Jurisdiction and Regulatory Authorities having jurisdiction at the plant site.

b) Repair/Replacement activities of nuclear components shall meet the requirements of ASME Section III, ASME Section XI, and/or other applicable standard, and the owner's requirements, and shall be subject to verification by the Jurisdiction and Regulatory Authorities having jurisdiction at the plant site.

c) Documentation of the repair/replacement activities of nuclear components shall be recorded on the Report of Repair/Replacement Activities of Nuclear Components and Systems for Nuclear Facilities, Form NR-1, or Report of Repair/Replacement Activities for Nuclear Pressure Relief Devices, Form NVR-1, in accordance with the NBIC Part 3, Section 5. The completed forms shall be signed by a representative of the "NR" Certificate Holder and the Authorized Nuclear Inspector when the repair/replacement activity meets the requirements of this section. For repair/replacement activities that involve design changes, Form NR-1, or Form NVR-1, as applicable, shall indicate the organization responsible for the design or design reconciliation in accordance with the owner's requirements.

d) The "NR" Certificate Holder shall provide a copy of the signed Form NR-1 or Form NVR-1, as applicable, to the owner, the Enforcement, and the Regulatory Authority if required, and the Authorized Nuclear Inspection Agency. The original Form NR-1 or Form NVR-1, as applicable, shall be registered with the National Board by the "NR" Certificate Holder. A NB registration log shall be maintained by the "NR" Certificate Holder. See NBIC Part 3, Section 5.5 and 5.6.

e) The "NR" Certificate Holder shall provide a nameplate/stamping for repair/replacement activities for each nuclear component unless otherwise specified by the owner's Quality Assurance Program. The

required information and format shall be as shown in NBIC Part 3, Section 5.

| Table 1.6.9 | | |
|---|---|---|
| Repair/Replacement Plan Criteria | | |
| | Essential Requirements | Instruction |
| A | Edition and/or addenda of codes | Including codes of construction, code cases, or standards used for the work performed, the NBIC Code edition, and the owner's requirements. |
| B | Identification of items | Description of items affected by the repair/replacement activity, including serial numbers, vendor identification, and code classes if applicable. |
| | | Location of installation if applicable. |
| C | Performance of the Repair/Replacement activity | Description of any defects, and nondestructive examination methods used to detect the defects |
| | | Defect removal method, measurement, and area identification/reference points. |
| | | Applicable welding/brazing procedures, heat treatment, nondestructive examination, and tests. |
| | | Final examination criteria to verify acceptability. |
| | | Preservice examination criteria if applicable. |
| D | Materials | Original specifications, new material specifications, including heat numbers, code edition/class and reconciliation requirements if applicable. |
| E | Description of Repair/Replacement activity | Include expected life of the item after completion if different from the original intended life as specified by the design specification. Application of the "NR" code symbol stamp if required. |
| F | Documentation | Generated as required by the quality assurance program and/or the owner's requirements. |
| | | Retention and submittal in accordance with the quality assurance program and/or the owner's requirements. |
| G | Evaluations/Acceptance | Evaluations/acceptance by the jurisdictional/regulatory authority as applicable. |
| H | Testing | Post repair/replacement testing criteria. |
| | | Test acceptance criteria to verify acceptability. |
| | | Types (pneumatic, hydrostatic, system leakage, or other). |
| I | Design | When applicable, design documents shall be certified by qualified/certified engineer. |
| J | Authorized Inspection Agency | Authorized Nuclear Inspector review/acceptance. |
| | | Authorized Nuclear Inservice Inspector review/acceptance. |
| K | Responsibilities for review, verification, and acceptance | Design, quality, work performed, examination/test, and records. |
| | | Owner acceptance of the repair/replacement plan. |

17-180 Galanes 12-12-17

**2.5.3.6 WELDING METHOD 6**
This welding method provides requirements for welding only Grade 91 tube material within the steam boiler Setting. ~~and when it is impracticable to perform local postweld heat treatment (PWHT).~~

The proposed revision shown above is to remove impracticable because this is redundant and is referenced in 2.5.3 below along with inadvisable.

**2.5.3 ALTERNATIVE WELDING METHODS WITHOUT POSTWELD HEAT TREATMENT**
a) Under certain conditions, postweld heat treatment, in accordance with the original code of construction, may be inadvisable or impractical. In such instances, the following alternative methods may be used.

Rationale: In WM 6 we have seemed to create confusion regarding the word impractical. Instead, since we have used both impractical and inadvisable in 2.5.3 and this applies to all alternative Welding Methods this would seem to suffice and remove confusion by owner's/user's.

# NBIC Item 18-15

## 2017 NBIC Current Text

### 1.5.1 OUTLINE OF REQUIREMENTS FOR A QUALITY SYSTEM FOR QUALIFICATION FOR THE NATIONAL BOARD "R" *CERTIFICATE OF AUTHORIZATION*

d) Statement of Authority and Responsibility

A dated *Statement of Authority*, signed by an officer of the organization, shall be included in the manual. Further, the *Statement of Authority* shall include:

1) A statement that all repairs or alterations carried out by the organization shall meet the requirements of the NBIC and the Jurisdiction, as applicable;

2) A statement that if there is a disagreement in the implementation of the Quality System, the matter is to be referred for resolution to a higher authority in the company;

3) The title of the individual who will be responsible to ensure that 1) above is followed and has the freedom and authority to carry out the responsibility.

## NBIC Proposed Text

### 1.5.1 OUTLINE OF REQUIREMENTS FOR A QUALITY SYSTEM FOR QUALIFICATION FOR THE NATIONAL BOARD "R" *CERTIFICATE OF AUTHORIZATION*

d) Statement of Authority and Responsibility

A dated *Statement of Authority and Responsibility*, signed by a senior management official of the organization, shall be included in the manual. Further, the *Statement* shall include:

1) A statement that all repairs or alterations carried out by the organization shall meet the requirements of the NBIC and the Jurisdiction, as applicable;

2) The title of individual who has the authority and responsibility charged with ensuring the Quality System is implemented as described, and confirming the freedom to identify quality problems and to initiate, recommend and provide solutions;

3) A statement that if there is a disagreement in the implementation of the Quality System, the matter is to be referred for resolution to a higher authority and shall be resolved in a manner that will not conflict with code, jurisdiction/regulatory authority or Quality System requirements, and

4) A statement of the full support of management for the Quality System

# NB14-0602A- IMPROVE INDEX PART I

## SUGGESTED CHANGES: PRESSURE RELIEF DEVICES

(1.4.5.1.1) 23,24,25,26 specific to PRV's
(2.9.6) delete refer to (2.9)
(4.4.2) delete refers to pressure gauge
(4.5.1)-(4.5.6) delete refer to (4.5)
(5.3.1)-(5.3.6) delete refer to (5.3)
(S5.5.2)
(S5.7.2)-(S5.4.6) delete refer to (S5.7)

## NEW INDEX PRESSURE RELIEF DEVICES

(1.4.5.1.1) 23,24,25,26 (2.9) (4.5) (5.3) (S5.7)

## SUGGESTED CHANGES-MOUNTING

(3.9) add in
(3.9.1) delete note word mounting should say installing & connecting only
(3.9.1.1.1) (3.9.1.3) (3.9.4.2) (3.9.4.5) delete
Refer to (3.9) note use of word mounting should be changed to installation.

## NEW INDEX

(3.9)

## SUGGESTED CHANGES SAFETY /SAFETY RELEIF VALVES

(1.4.5.1.1) Guide for completing National Board Boiler Installation Report
(2.5.1.1) Volume
(2.9) Pressure Relief Valves
(2.9.1) Valve Requirements-General-delete
(2.9.1.1) (2.9.1.2) (2.9.1.3) (2.9.1.4) delete
All covered under (2.9)
(2.9.3) Super heaters- delete
(2.9.4) Economizers-delete
(2.9.5) Pressure Reducing Valves- delete
(2.9.6) Mounting & Discharge Requirements
(Installation) delete
All covered on 2.9

(3.7.4) Feedwater, Makeup Water & Water Supply
(3.7.5) Stop Valves- delete – There is no reference to Pressure Relief Valves
(3.7.7.1) Steam Heating, Hot Water Heating,
Hot Water Supply Boilers
(3.7.8.1) Individual Modules
(3.7.9.1) Expansion Tanks
(3.8.2.1) Pressure or Altitude Gages
(3.9.1.1) delete refer to 3.9-note remove word mounting
(3.9.1.1.1) Permissible Mounting (Installation)
delete refer to 3.9
(3.9.1.1.2) delete refer to 3.9
(3.9.1.3) delete refer to 3.9
(3.9.1.4) listed twice refer to 3.9
(3.9.1.6) delete
(3.9.3) (3.9.4) delete refer to 3.9
(3.9.4.1) (3.9.4.7) delete refer to 3.9
(3.9.5) (3.9.5.1) (3.9.5.2) delete refer to 3.9
(S1.2) (S2.5) (S3.6) (S5.5.2)
(S5.5.7) delete –not applicable-electrical

## NEW INDEX SAFETY/RELIEF VALVES

(1.4.5.1.1) (2.5.1.1) (2.9) (3.7.4) (3.7.7.1) (3.7.8.1) (3.7.9.1) (3.8.2.1) (3.9) (S1.2)
(S2.5) (S2.6) (S5.5.2) (9.1)

## SAFETY VALVE CAPACITY

(3.7.7.1) (3.9.2) (S2.2) No change

## SUGGESTED CHANGES – SET PRESSURE

(1.4.5.1) (1.4.5.1.1)
(2.73) (2.75) (2.8.1) delete refer to (2.7)
(2.9.1.4) (2.9.2) (2.9.3) delete refer to (2.9)
(3.7.4) (3.9.4) delete refer to (3.9)
(4.4.2)
(4.4.5) delete located in Part 2
(4.5.5) (5.3.5) (S5.7.5) (9.1)

## NEW INDEX- SET PRESSURE

(1.4.5.1) (1.4.5.1.1) (2.7) (2.9) (3.9)
(4.4.2) (4.5.5) (5.3.5) (S5.7.5) (9.1)

## SUGGESTED CHANGES- CAPACITY

(1.4.5.1) (1.4.5.1.1) (2.4.1) (2.5.1.1) (2.5.1.3)
(2.5.3.2) (2.5.4)
(2.9.1.1) (2.9.1.3) (2.9.2) (2.9.3) (2.9.4) (2.9.5)
(2.9.6) delete refer to 2.9
(3.4.1) delete refers to fuel
(3.4.5) doesn't exist in Part 1. It is located in Part 2
(3.5.4) (3.7.6) (3.7.7.1) (3.7.9.1) (3.7.9.2)
(3.9.1.1.2) (3.9.1.5) (3.9.1.6)
(3.9.2) (3.9.3) (3.9.4) delete refer to (3.9)
(3.9.4.3) (3.9.4.7) (3.9.5.2) (3.9.5.3)
(4.5.1) (4.5.4) (4.5.5) (4.5.6) delete
Refer to (4.5)
(5.3.1) (5.3.4) (5.3.5) (5.3.6) delete refer to (5.3)
(S2.1) (S2.2) (S2.3) (S2.4)
(S3.6) (S2.8.1) (S2.11) (S2.15) ) (S5.3.1)
(S5.7.4) (S5.7.5) (S5.7.6)) delete
All covered under (S5.7)
(S6.8) (S6.13.9) (S6.13.11.2) delete
All are located in Part 2
(9.1)

## NEW INDEX CAPACITY

(1.4.5.1) (1.4.5.1.1) (2.4.1) (2.5.1.1) (2.5.1.3)
(2.5.3.2) (2.5.4) (2.9)
(3.5.4) (3.7.6) (3.7.7.1) (3.7.9.1) (3.7.9.2)
(3.9.1.1.2) (3.9.1.5) (3.9.1.6) (3.9)
(3.9.4.3) (3.9.4.7) (3.9.5.2) (3.9.5.3)
(4.5) (5.3) (S2.1) (S2.2) (S2.3) (S2.4)
(S3.6) (S2.8.1) (S2.11) (S2.15)
(S5.3.3) (S5.7) (9.1)

# COMMITTEE CORRESPONDENCE

**COMMITTEE:** National Board Inspection Code
Subcommittee Pressure Relief Devices

**ADDRESS WRITER CARE OF:**
JAC Consulting, Inc.
213 Park View Drive
Belmont, NC 28012
Phone: (704)301-8532
E-mail: alton@jaltoncox.com

**TO:** Task Group Members **DATE:** January 11, 2018

**SUBJECT:** N15-0310, Give Guidance as to Which Spring Chart Should be used in Repairs

Task Group Discussion:

BACKGROUND / RATIONALE:
**NBIC PART 4, SEC 4.8.5.4, i) 3)** requires identification of the spring in a PRV during a VR Repair. However, this requirement does not specifically mention use of Manufacturer's Spring Charts. The method of determining the correct spring is a matter of interpretation of the code by the VR Holder. Spring identification during PRV Repair is critical to the proper operation of the PRV in service.

| **Existing Words** | **Suggested Revision** |
|---|---|
| The system shall include a method of controlling the repair or replacement of critical valve parts. The method of identifying each spring shall be indicated. | The system shall include a method of controlling the repair or replacement of critical valve parts. The method of identifying each spring shall be indicated *on the repair document described in 4.8.5.4 i). Such identification shall be based on the Manufacturer's spring chart current at the time of the repair, except that the spring removed from the valve during the repair bearing different identification may be reinstalled provided the "VR" Certificate Holder has verified the spring is acceptable to the Manufacturer. Such verification shall be documented on the repair document described in 4.8.5.4 i).* |

Best Regards,

J. Alton Cox

## ITEM NB16-0401 1/10/18

## 4.7.2 REPAIR NAMEPLATE

When a pressure relief valve is repaired, a metal repair nameplate stamped with the information required below shall be securely attached to the valve adjacent to the original manufacturer's stamping or nameplate. If not installed directly on the valve, the nameplate shall be securely attached to the valve independent of the external adjustment seals in a manner that does ~~so as~~ not ~~to~~ interfere with valve operation and sealed in accordance with the quality system.

**ITEM 17-117 Proposal 1/9/18**

**Part 4, 2.2.1 GENERAL REQUIREMENTS**

a) Only direct spring loaded pressure relief valves or pilot operated pressure relief valves designed to relieve steam shall be used for steam service.

b) Pressure relief valves are valves designed to relieve either steam or water, depending on the application.

c) Pressure relief valves shall be manufactured in accordance with a national or international standard.

d) Deadweight or weighted-lever pressure relief valves shall not be used.

e) For high temperature water boilers, pressure relief valves shall have a closed bonnet, and valve bodies shall not be constructed of cast iron.

f) Pressure relief valves with an inlet connection greater than NPS 3 (DN 80) and used for pressure greater than 15 psig (100 kPa), shall have a flanged or a welded inlet connection. The dimensions of flanges subjected to boiler pressure shall conform to the applicable standards.

g) When a pressure relief valve is exposed to outdoor elements that may affect operation of the valve, the valve may be shielded with a cover. The cover shall be ~~properly~~ vented and arranged to permit servicing and normal operation of the valve.

**Part 1, 2.9.1 VALVE REQUIREMENTS – GENERAL**

a) Only direct spring loaded pressure relief valves or pilot operated pressure relief valves designed to relieve steam shall be used for steam service.

b) Pressure relief valves are valves designed to relieve either steam or water, depending on the application.

c) Pressure relief valves shall be manufactured in accordance with a national or international standard.

d) Deadweight or weighted-lever pressure relief valves shall not be used.

e) For high temperature water boilers, pressure relief valves shall have a closed bonnet, and valve bodies shall not be constructed of cast iron.

f) Pressure relief valves with an inlet connection greater than NPS 3 (DN 80) and used for pressure greater than 15 psig (100 kPa), shall have a flanged or a welded inlet connection. The dimensions of flanges subjected to boiler pressure shall conform to the applicable standards.

g) When a pressure relief valve is exposed to outdoor elements that may affect operation of the valve, the valve may be shielded with a cover. The cover shall be ~~properly~~ vented and arranged to permit servicing and normal operation of the valve.

c) Pressure relief valves shall be connected to the boiler independent of any other connection without any unnecessary intervening pipe or fittings. Such intervening pipe or fittings shall not be longer than the face-to-face dimension of the corresponding tee fitting of the same diameter and pressure rating as listed in the applicable standards.



### 2.2.4 CAPACITY

a) The pressure relief valve capacity for each boiler shall be such that the valve or valves will discharge all the steam that can be generated by the boiler without allowing the pressure to rise more than 6% above the highest pressure at which any valve is set and in no case to more than 6% above the maximum allowable working pressure of the boiler.

b) The minimum relieving capacity for other than electric boilers and forced-flow steam generators with no fixed steam line and waterline shall be estimated for the boiler and waterwall heating surfaces as given in Table 2.2.4.1, but in no case shall the minimum relieving capacity be less than the maximum designed steaming capacity as determined by the manufacturer.

c) ~~The required relieving capacity in lbs/hr of the pressure relief valves on a high temperature water boiler shall be determined by dividing the maximum output in Btu at the boiler nozzle obtained by the firing of any fuel for which the unit is designed by one thousand.~~

d) The minimum pressure relief valve relieving capacity for electric boilers shall not be less than 3.5 lbs/hr/kW (1.6 kg/hr/kW) input.

e) If the pressure relief valve capacity cannot be computed, or if it is desirable to prove the computations, it should be checked by any one of the following methods; and if found insufficient, additional relieving capacity shall be provided:

1) By performing an accumulation test, that is, by shutting off all other steam discharge outlets from the boiler and forcing the fires to the maximum. This method should not be used on a boiler with a superheater or reheater or on a high-temperature water boiler.

2) By measuring the maximum amount of fuel that can be burned and computing the corresponding evaporative capacity upon the basis of the heating value of the fuel.

3) By determining the maximum evaporative capacity by measuring the feedwater. The sum of the pressure relief valve capacities marked on the valves shall be equal to or greater than the maximum evaporative capacity of the boiler. This method should not be used on high-temperature water boilers.

The required relieving capacity, *C*, of the pressure relief valves on a high temperature water boiler shall be determined as follows:

$$C = Q/L$$

where,

*C* = required relieving capacity in lbs/hr (kg/hr)
*Q* = maximum output in BTU/hr (W) at the boiler nozzle obtained by the firing of any fuel for which the unit is designed
*L* = 1000 BTU/lb (646 W·hr/kg)

in NBIC Part 1, Table 2.9.1.3, but in no case shall the minimum relieving capacity be less than the maximum designed steaming capacity as determined by the manufacturer.

c) ~~The required relieving capacity in pounds per hour of the pressure relief valves on a high temperature water boiler shall be determined by dividing the maximum output in Btu at the boiler nozzle obtained by the firing of any fuel for which the unit is designed by one thousand.~~

d) The minimum pressure relief valve relieving capacity for electric boilers shall not be less than 3.5 lbs/hr/kW (1.6 kg/hr/kW) input.

e) If the pressure relief valve capacity cannot be computed, or if it is desirable to prove the computations, it should be checked by any one of the following methods; and if found insufficient, additional relieving capacity shall be provided:

1) By performing an accumulation test, that is, by shutting off all other steam discharge outlets from the boiler and forcing the fires to the maximum. This method should not be used on a boiler with a superheater or reheater, or on a high-temperature water boiler;

2) By measuring the maximum amount of fuel that can be burned and computing the corresponding evaporative capacity upon the basis of the heating value of the fuel;

3) By determining the maximum evaporative capacity by measuring the feedwater. The sum of the pressure relief valve capacities marked on the valves shall be equal to or greater than the maximum evaporative capacity of the boiler. This method should not be used on high-temperature water boilers.

The required relieving capacity, $C$, of the pressure relief valves on a high temperature water boiler shall be determined as follows:

$$C = Q/L$$

where,

$C$ = required relieving capacity in lbs/hr (kg/hr)
$Q$ = maximum output in BTU/hr (W) at the boiler nozzle obtained by the firing of any fuel for which the unit is designed
$L$ = 1000 BTU/lb (646 W·hr/kg)

NB17-120 changeover valve definition

Adam Renaldo proposed edits

1-11-18

Part 4, 2.2.10

d) No valves of any type except a changeover valve ~~as defined below~~ shall be placed between the pressure relief valves and the boiler, nor on the discharge pipe between the pressure relief valves and the atmosphere. A changeover valve, ~~which allows two redundant pressure relief valves to be installed for the purpose of changing from one pressure relief valve to the other while the boiler is operating,~~ may be used provided the changeover valve is in accordance with the original code of construction. It is recommended that the ~~-~~Jurisdiction be contacted to determine the acceptability of the changeover valves on boiler applications. ~~The changeover valve shall be designed such that there is no intermediate position where both pressure relief valves are isolated from the boiler.~~

Part 1, 2.9.6

d) No valves of any type except a changeover valve ~~as defined below~~ shall be placed between the pressure relief valves and the boiler, nor on the discharge pipe between the pressure relief valves and the atmosphere. A changeover valve, ~~which allows two redundant pressure relief valves to be installed for the purpose of changing from one pressure relief valve to the other while the boiler is operating,~~ may be used provided the changeover valve is in accordance with the original code of construction. It is recommended that the Jurisdiction be contacted to determine the acceptability of the changeover valves on boiler applications. ~~The changeover valve shall be designed such that there is no intermediate position where both pressure relief valves are isolated from the boiler.~~

New Glossary Term…

Changeover valve – A three-way stop (or diverter) valve with one inlet port and two outlet ports designed to isolate either one of the two outlet ports from the inlet port, but not both simultaneously during any mode of operation.

# *NBIC – ASME Liaison Report*

**NBIC Standards Committee**
**January 11, 2018**

# *NBIC - ASME Liaison Report*

- CA-1 Conformity Assessment Requirements
  - *Ongoing work at CAR Committee to address Field Sites, CAP-21, CAP-22, PRD, PRT Designator, and Nuclear CA*
- BPV Parts Fabrication Certificate
  - *Program gaining participation; 18 certificates issued, 15 applications in process*
- AIA Accreditation
  - *Major reorganization of QAI-1 Standard under development*
  - *Book Section actions to reference QAI-1 for types of AIAs*
- Related Developments and Considerations
  - *Identification of Certificate Number on Data Plates*
  - *Certification program for B31.1 High Energy Critical Piping*

# NBIC - ASME Liaison Report

## Questions / Discussion

# NBIC - AWS Liaison Report

## January, 2018

The following listed actions are currently in process within the American Welding Society.

- The B2 committee has agreed to systematically update all published SWPS's to bring them in line with the advancements realized by the Welding Community over the last 20 years or so. This effort is to include:
  - Deletion of the reference to "S" numbers recently deleted by ASME
  - Deleting the Metric Conversion Table opting to reference the actual metric equivalent adjacent to the listed Imperial value.
  - Adding a paragraph or so to address "Repairs".
  - Offering additional Tungsten Classifications (as applicable).
  - Updating the Welding Symbols
  - Additional items as determined by the SWPS Sub Committee.
  - Although minor word engineering may be adopted, no change in philosophy or application is anticipated
- The NBIC needs to understand that these changes will not affect previous versions of the same SWPS. Those version are still very valid and readily useable and unless you have a specific need to replace them; I would not.
- The AWS B2 committee is in process of developing a compliment of Aluminum SWPS using both the GTAW and GMAW processes for the common grades of Aluminum.
- The B2 committee is also developing the plan to begin development of additional SWPS's for Carbon, Stainless and Low Alloy Steels using the GMAW, FCAW and SAW processes.
- At some point in the distant future, additional SWPS's will be developed addressing Notch Toughness applications (incorporating both traditional and Wave Form variables) for the common Carbon and Alloy Steels.
- Additional SWPS-N are in process of development. To date six have been through the approval process and are at the printers. They will not be offered to the NBIC for adoption since their use is primarily intended for NAVSHIPS application.

The following SWPS's are in the final stages of adoption by the B2 committee and will be balloted to the AWS Technical Activities Committee (TAC): and adopted in 2018.

| | | |
|---|---|---|
| B2.1-1-016 | B2.1-1-019 | B2.1-1-022 |
| B2.1-1-017 | B2.1-1-020 | B2.1-1-023 |
| B2.1-1-018 | B2.1-1-021 | B2.1-1-026 |

The B2 committee is aggressively working to complete this update in the next couple of years

The long range plan for the updated SWPs is to group them into an ANSI approved "Stabilized Maintenance Program" exempting them from the traditional ANSI 5/10 year re-balloting requirement.

As in the past, as newly developed SWPS's are approved by the various committees, they will be offered to the NBIC for adoption. See the attached AWS B2 Committee schedule for additional information.

Regards,

*Jim Sekely*