Date Distributed: 11/5/2018

THE NATIONAL BOARD OF BOILER AND PRESSURE VESSEL INSPECTORS

NATIONAL BOARD
NBIC MAIN COMMITTEE

MINUTES

Meeting of October 25th, 2018
WebEx Online Meeting

These minutes are subject to approval and are for the committee use only.
They are not to be duplicated or quoted for other than committee use.

The National Board of Boiler & Pressure Vessel Inspectors
1055 Crupper Avenue
Columbus, Ohio 43229-1183
Phone: (614)888-8320
FAX: (614)847-1828

1. **Call to Order (1 p.m. Eastern Time)**

   NBIC Main Committee Chair Mr. Bob Wielgoszinsksi called the meeting to order at 1 p.m. Eastern Daylight Time.

2. **Introduction of Members and Visitors**

   The following people were present at the meeting:
   Bob Wielgoszinski – Chair
   Brian Morelock – Member
   Paul Edwards – Member
   Mark Mooney – Member
   Jim Sekely – Member
   Kevin Simmons – Member
   Jim Pillow – Member
   Melissa Wadkinson – Member
   Don Cook – Member
   Rob Troutt – Member
   Paul Welch – Member
   Jim Getter – Member
   Mike Richards – Member
   Joel Amato – Member
   Jonathan Ellis – Secretary
   Gary Scribner – National Board Staff
   Jodi Metzmaier – National Board Staff
   Tom Beirne – National Board Staff
   Randy Austin – Guest
   Nathan Carter – Guest

   It should be noted that the meeting was a WebEx meeting whereas all members voted electronically via the internet. There were occasions during the meeting where not all members could electronically cast a vote. In those instances their vote was verbally cast and recorded in these minutes as such.

3. **Adoption of the Agenda**

   A motion was made, seconded, and unanimously approved to adopt the agenda as presented.

4. **Public Review Comments**

   a. **Subcommittee Installation**

Item Number: PR18-0101	NBIC Location: Part 1, 1.6.3	Attachment Page 1
General Description: Specify “fired or electrically heated pressure vessels” instead of “pressure vessels” in the referenced paragraph (item NB16-0905) **MC Meeting Action:** Ms. Melissa Wadkinson introduced the comment and the changes being proposed. Ms. Wadkinson then explained the proposed answer put forth by the subcommittee. A motion was made and seconded to move forward with Response 2: Accept in Principle, New Business Item Opened. No additional discussion was held after the motion. The motion passed unanimously (Mr. Mike Richards and Mr. Wielgoszinski voice voted his approval of the motion).		

Item Number: PR18-0102	NBIC Location: Part 1, 1.6.9	Attachment Page 3
General Description: Do the changes made by item NB16-0101 apply to potable water heaters and thermal fluid heaters? **MC Meeting Action:** Ms. Melissa Wadkinson introduced the comment and the changes being proposed. Ms. Wadkinson then explained the proposed answer put forth by the subcommittee. A motion was made and seconded to move forward with Response 2: Accept in Principle, New Business Item Opened. Mr. Rob Troutt asked clarifying questions as to why specific boilers/vessels need to be listed, feeling that Response 4: Rejected would be more appropriate. No further discussion was held. The motion was approved with one negative vote from Mr. Rob Troutt: “I voted negative on this item as I feel the response should be #4. The current proposed wording explains this requirement is for fuel fired boilers and fuel fired pressure vessels. There is no need to list out the type of fuel fired vessels.” (Mr. Wielgoszinski voice voted his approval of the motion)		

b. Subcommittee Inspection

Item Number: PR18-0201	NBIC Location: Part 2, 2.3.6.2 b) 2)	Attachment Page 5
General Description: (Item 17-153) Replace “a R stamp holder” with “an R stamp holder” in the referenced paragraph. **MC Meeting Action:** Mr. Jim Getter introduced the comment and the changes being proposed, as well as the proposed response voted on by the subcommittee. A motion was made and seconded to move forward with Response 1: Accepted, changes are incorporated. The motion was approved unanimously (Mr. Wielgoszinski voice voted his approval of the motion)		

Item Number: PR18-0202	NBIC Location: Part 2, 2.3.6.8 a) 5)	Attachment Page 7

General Description: (Item 18-7, 18-60) Change spelling of “gauge” to “gage” to stay consistent with the rest of the NBIC.

MC Meeting Action: Mr. Jim Getter introduced the comment and the changes being proposed, as well as the proposed response voted on by the subcommittee. A motion was made and seconded to move forward with Response 1: Accepted, changes are incorporated. The motion was approved unanimously (Mr. Wielgoszinski voice voted his approval of the motion).

Item Number: PR18-0206	NBIC Location: Part 2, S12.2 a)	Attachment Page 9

General Description: (Item NB16-2809) 10 ft is converted to 3050mm in the referenced section instead of 3.0m like the rest of the NBIC.

MC Meeting Action: Mr. Jim Getter introduced the comment and the changes being proposed, as well as the proposed response voted on by the subcommittee. A motion was made and seconded to move forward with Response 1: Accepted, changes are incorporated. The motion was approved unanimously (Mr. Wielgoszinski voice voted his approval of the motion).

Item Number: PR18-0207	NBIC Location: Part 2, S12.2 e)	Attachment Page 11

General Description: (Item NB16-2809) 36in is used instead of being converted to 0.9m.

MC Meeting Action: Mr. Jim Getter introduced the comment and the changes being proposed, as well as the proposed response voted on by the subcommittee. A motion was made and seconded to move forward with Response 1: Accepted, changes are incorporated. The motion was approved unanimously (Mr. Wielgoszinski voice voted his approval of the motion).

Item Number: PR18-0208	NBIC Location: Part 2, 2.6, 2.7, 2.8, S14	Attachment Page 13

General Description: (Items NB17-0403, 18-70, 18-71, 18-72) The T/O program is not an in-service inspection activity, so it should not be included in Part 2.

MC Meeting Action: Mr. Jim Getter introduced the comment and the changes being proposed, as well as the proposed response voted on by the subcommittee. A motion was made and seconded to move forward with Response 1: Accepted, changes are

incorporated. Mr. Gary Scribner provided clarification as to why the T/O program should not be included in Part 2 (it is an accreditation program not an in-service inspection activity). Mr. Rob Troutt asked a question to clarify that the language will still appear in Part 4. Mr. Scribner confirmed that it will. No further discussion was held. The motion was approved unanimously (Mr. Wielgoszinski voice voted his approval of the motion).

c. Subcommittee Repairs and Alterations

Item Number: PR18-0301	**NBIC Location: Part 3, 1.6.8.2 j)**	**Attachment Page 27**

General Description: (Item 17-168) Editorial: “Certificate Holders” should be corrected to “Certificate Holder’s” in the referenced text.

MC Meeting Action: Mr. Rob Troutt introduced the comment and the changes being proposed. Mr. Paul Edwards explained further and proposed Response 1, which was the response voted on by the subcommittee. His motion was seconded. No further discussion was held. The motion was approved unanimously (Mr. Wielgoszinski voice voted his approval of the motion).

Item Number: PR18-0302	**NBIC Location: Part 3, 1.6.8.3 p) 1)**	**Attachment Page 29**

General Description: (Item 17-168) Editorial: Change “non-conformances” to “nonconformances” in the referenced paragraph.

MC Meeting Action: Mr. Rob Troutt introduced the comment and the changes being proposed, as well as the proposed response voted on by the subcommittee. A motion was made and seconded to move forward with Response 1: Accepted, Changes are Incorporated. No further discussion was held. The motion was approved unanimously (Mr. Wielgoszinski voice voted his approval of the motion).

Item Number: PR18-0303	**NBIC Location: Part 3, 1.6.6.3 l), 1.6.7.2 l), 1.6.8.2 l)**	**Attachment Page 31**

General Description: (Item NB16-0609) Editorial: Revise "NR Certificate Holder’ Quality Program" to ""NR" Certificate Holder's Quality Program".

MC Meeting Action: Mr. Rob Troutt introduced the comment and the changes being proposed, as well as the proposed response voted on by the subcommittee. A motion was made and seconded to move forward with Response 1: Accepted, Changes are Incorporated. No further discussion was held. The motion was approved unanimously (Mr. Wielgoszinski voice voted his approval of the motion).

Item Number: PR18-0304	NBIC Location: Part 3, 9.1	Attachment Page 34

General Description: (Item 18-40) Editorial: In definition of welding revise "metal" and "nonmetal" to "metallic" and "nonmetallic", respectively.

MC Meeting Action: Mr. Rob Troutt introduced the comment and the changes being proposed, as well as the proposed response voted on by the subcommittee. A motion was made and seconded to move forward with Response 1: Accepted, Changes are Incorporated. No further discussion was held. The motion was approved unanimously (Mr. Wielgoszinski voice voted his approval of the motion).

Item Number: PR18-0305	NBIC Location: Part 3, 9.1	Attachment Page 36

General Description: (Item 18-40) Editorial: In definition of welding revise "metal" and "nonmetal" to "metallic" and "nonmetallic", respectively.
**Note that this comment is a duplicate of PR18-0304 that was submitted by the original commenter.

MC Meeting Action: Mr. Rob Troutt explained that this was a duplicate of PR18-0304, and proposed that the same action be taken as the action taken for PR18-0304. The motion was seconded and unanimously approved (Mr. Wielgoszinski voice voted his approval of the motion).

Item Number: PR18-0306	NBIC Location: Part 3, 2.3 b)	Attachment Page 37

General Description: (Item 18-14) Editorial: 2nd bullet - Technically, "AMD1" is not initials since it is a mix of letters and numbers. (It is also not an acronym.) Recommend the word "initials" be replaced by "suffix".

MC Meeting Action: Mr. Rob Troutt introduced the comment and the changes being proposed, as well as the proposed response voted on by the subcommittee. A motion was made and seconded to move forward with Response 1: Accepted, Changes are Incorporated. Discussion was held on adding quotation marks around AMD1 and clarification was provided. The motion was approved unanimously (Mr. Wielgoszinski voice voted his approval of the motion).

Item Number: PR18-0307	NBIC Location: Part 3, 2.5.3 e)	Attachment Page 39

General Description: (Item 18-48) Revise existing text: Re: SI equivalent of 3/8 in, per Table 7.4-c, this value should be 10 mm, which is the value used elsewhere in Part 3.

MC Meeting Action: Mr. Rob Troutt introduced the comment and the changes being proposed, as well as the proposed response voted on by the subcommittee. A motion was made and seconded to move forward with Response 1: Accepted, Changes are Incorporated. No further discussion was held. The motion was approved unanimously (Mr. Wielgoszinski voice voted his approval of the motion).

Item Number: PR18-0308	NBIC Location: Part 3, 2.5.3.2 d) 4) b)	Attachment Page 42

General Description: (Item 17-152) Recommend revise "tube to header" to "tube-to-header" (with hyphens) for style consistency with ASME. For example, they use "tube-to-tubesheet",

MC Meeting Action: Mr. Rob Troutt introduced the comment and the changes being proposed, as well as the proposed response voted on by the subcommittee. A motion was made and seconded to move forward with Response 1: Accepted, Changes are Incorporated. No further discussion was held. The motion was approved unanimously (Mr. Wielgoszinski voice voted his approval of the motion).

Item Number: PR18-0309	NBIC Location: Part 3, 3.3.3 u) 3) and 5)	Attachment Page 44

General Description: (Item NB12-0801) Editorial: In 3.3.3 u) 3) "OEM" and "MDR" are used for the first time. They are not explained until 3.3.3 u) 5). Recommend that the full terms and their abbreviations be used in 3.3.3 u) 3). The abbreviations can then be used by themselves in subsequent references.

MC Meeting Action: Mr. Rob Troutt introduced the comment and the changes being proposed, as well as the proposed response voted on by the subcommittee. A motion was made and seconded to move forward with Response 1: Accepted, Changes are Incorporated. Further discussion was held to make sure the correct changes being proposed will be the changes sent to the editors. The motion was approved unanimously (Mr. Wielgoszinski voice voted his approval of the motion).

Item Number: PR18-0310	NBIC Location: Part 3, 3.4.1 d)	Attachment Page 47

General Description: (Item 17-150) Recommend the last sentence be revised, in part, to state: "...with NBIC Part 3, 3.4.1 d)" so as to specifically identify the Part of the NBIC in which the paragraph is referenced.

MC Meeting Action: Mr. Rob Troutt introduced the comment and the changes being proposed, as well as the proposed response voted on by the subcommittee. A motion was made and seconded to move forward with Response 1: Accepted, Changes are Incorporated. Mr. Troutt commented that the committee should look at how paragraph references are written within the NBIC. This will be discussed at the next Executive Committee meeting. The motion was approved unanimously (Mr. Wielgoszinski voice voted his approval of the motion).

Item Number: PR18-0311	NBIC Location: Part 3, 5.12.4.3 13)	Attachment Page 49

General Description: (Item 17-179) Editorial: Correct "manufacturers" to "Manufacturer's".

MC Meeting Action: Mr. Rob Troutt introduced the comment and the changes being proposed, as well as the proposed response voted on by the subcommittee. Mr. Troutt explained that two separate motions were voted on by the subcommittee: one to accept the apostrophe change, and the other to reject the capitalization. A motion with a a Response 1, to accept and incorporate the apostrophe was made and seconded. This motion was approved unanimously (Mr. Wielgoszinski voice voted his approval of the motion). A second motion with a Response 4, was made to reject the capitalization of “manufacturer’s” for the reason that manufacturer is being used as an adjective, not a noun. This second motion was seconded and approved unanimously (Mr. Wielgoszinski voice voted his approval of the motion).

Item Number: PR18-0312	NBIC Location: Part 3, 5.12.4.4 14)	Attachment Page 51

General Description: (Item 17-179) Editorial: 1] Correct "Inspectors" to "Inspector's".

[2] Revise "Province" to "Provincial" to be consistent with current NBIC reference

MC Meeting Action: Mr. Rob Troutt introduced the comment and the changes being proposed, as well as the proposed response voted on by the subcommittee. A motion was made and seconded to move forward with Response 1: Accepted, Changes are Incorporated. No further discussion was held. The motion was approved unanimously (Mr. Wielgoszinski voice voted his approval of the motion).

Item Number: PR18-0313	NBIC Location: Part 3, 5.12.4.4 14)	Attachment Page 56

General Description: (Item 17-179) Editorial: 1] Correct "Inspectors" to "Inspector's".

[2] Revise "Province" to "Provincial" to be consistent with current NBIC reference
**Note that this is a duplicate of PR18-0312 submitted by the original commenter.

MC Meeting Action: Mr. Troutt introduced the item and explained that this is a duplicate comment to PR18-0312. A motion was made and seconded to respond to this comment in the same manner as PR18-0312. The motion was approved unanimously (Mr. Wielgoszinski voice voted his approval of the motion).

Item Number: PR18-0314	NBIC Location: Part 3, S1.1.4	Attachment Page 57

General Description: (Item NB16-1801) “This is not part of the "action", but it may be worth considering a revision to S1.1.4 - FORMULA AND CALCULATIONS FOR STEAM LOCOMOTIVE BOILERS since rules for riveted construction (Part PR) were modernized in 2013 and Locomotive Boilers (Part PL) was added to Section I in 2015.”

The current [2017 NBIC] text reads:

"a) Most steam locomotive boilers were manufactured in the first half of the 20th century or before. The calculations, formula, and shop practices used are now distant history and quite difficult to obtain. The rules for riveted construction were last published by ASME in Section I Code, 1971 Edition."

MC Meeting Action: Mr. Troutt introduced the comment and the changes being proposed. Mr. Troutt then explained the proposed answer put forth by the subcommittee. A motion was made and seconded to move forward with Response 2: Accept in Principle, New Business Item Opened. No additional discussion was held after the motion. The motion passed unanimously (Mr. Wielgoszinski voice voted his approval of the motion).

Item Number: PR18-0315	NBIC Location: Part 3, S1.1.4	Attachment Page 60

General Description: (Item NB16-1801) “This is not part of the "action", but it may be worth considering a revision to S1.1.4 - FORMULA AND CALCULATIONS FOR STEAM LOCOMOTIVE BOILERS since rules for riveted construction (Part PR) were modernized in 2013 and Locomotive Boilers (Part PL) was added to Section I in 2015.”
**Note that this is a duplicate of PR18-0314 submitted by the original commenter

MC Meeting Action: Mr. Troutt explained that this comment was a duplicate of PR18-0314, and proposed that the response be the same as PR18-0314. The motion was seconded and unanimously approved (Mr. Wielgoszinski voice voted his approval).

Item Number: PR18-0316	NBIC Location: Part 3, S3.5.5 f)	Attachment Page 61

General Description: (Item NB15-2210)

Editorial: [1] R and G should be within quotation marks ("R", "G");

[2] Correct "concurrence fo the Inspector" to "concurrence of the Inspector".

MC Meeting Action: Mr. Troutt introduced the comment and explained the changes being proposed. He also explained the subcommittee's proposed response. Mr. Troutt and Mr. Wielgoszinski provided some clarification on some issues found at the subcommittee meeting that will need to be addressed for item NB15-2210 and why Response 1 is being proposed. That is to say, that the "R" and "G" are not really designators. They are just additional letters posted beneath the certification Mark and designator to indicate type of construction. However, even though the language of "designator" in this NBIC change is not completely accurate, the industry need for the remainder of the revision outweighs the minor editorial word difference. A motion was made and seconded to move forward with Response 1: Accepted, Changes are Incorporated. The motion was unanimously approved (Mr. Wielgoszinski voice voted his approval of the motion). A new record will be opened at the Committee to immediately deal with the word "designator" change.

d. Subcommittee Pressure Relief Devices

Item Number: PR18-0203	NBIC Location: Part 2, 2.6, 2.7, 2.8, S14.2.6	Attachment Page 66

General Description: (Items NB17-0403, 18-70, 18-71, 18-72) Is there a compelling reason why the wording in Part 2, 2.6.3.4 q) needs to be substantially different from that found in Part 3, 1.5.1 q)?

MC Meeting Action: Mr. Tom Beirne introduced the comment and the changes being proposed. He also explained why the subcommittee selected Response 4: Rejected for the reason that the wording for T/O program is currently consistent with the VR section of Part 4 of the NBIC. A motion was made and seconded to move forward with this response. The motion was approved unanimously (Mr. Wielgoszinski voice voted his approval of the motion).

Item Number: PR18-0204	NBIC Location: Part 2, 2.6.4	Attachment Page 68

General Description: (Items NB17-0403, 18-70, 18-71, 18-72) Making sure that referenced certification marks, stamps, symbols, and designators are enclosed in quotation marks to be consistent with the rest of the NBIC.

MC Meeting Action: Mr. Tom Beirne introduced the comment and the proposed changes. He also explained the committees proposed response. A motion was made and seconded to move forward with Response 1: Accepted, Changes are Incorporated. The motion was unanimously approved (Mr. Wielgoszinski voice voted his approval).

Item Number: PR18-0205	**NBIC Location: Part 4, S7.2 a) 4)**	**Attachment Page 69**

General Description: Insert "the" directly before the words "Quality Department".

MC Meeting Action: Mr. Tom Beirne introduced the comment and the proposed changes. He also explained the committees proposed response. A motion was made and seconded to move forward with Response 1: Accepted, Changes are Incorporated. The motion was unanimously approved (Mr. Mike Richards voice voted his approval).

Item Number: PR18-0208	**NBIC Location: Part 2, 4**	**Attachment Page 71**

General Description: In regards to NB17-0403, 18-70, 18-71, and 18-72, the T/O program should only be included in Part 4 of the NBIC.

MC Meeting Action: No additional action was taken as this was already voted on earlier in the meeting. Mr. Beirne commented that this was being presented to show that subcommittee PRD also agreed with the proposed response of Response 1: Accepted, Changes are Incorporated.

Item Number: PR18-0401	**NBIC Location: Part 4, 1.4**	**Attachment Page 72**

General Description: Should in-service be hyphenated or not (editorial).

MC Meeting Action: Mr. Beirne introduced the comment and the changes being proposed. A motion was made and seconded to move forward with Response 2: Accepted in Principle, New Business Item Opened. Discussion was held on how this should be corrected, namely if the editors should make a blanket change or if the changes should be double-checked by the committee. The committee agreed with the latter course of action. The initial motion was approved unanimously (Mr. Jim Sekely voice voted his approval).

Item Number: PR18-0402	**NBIC Location: Part 4, 2.2.1 a), S6.1, S6.3, Part 1, 2.9.1 a)**	**Attachment Page 73**

General Description: Change "Power Operated" to "Power Actuated" in referenced paragraphs.

MC Meeting Action: Mr. Beirne introduced the comment and the changes being proposed. A motion was made and seconded to move forward with Response 1:

Accepted, Changes are Incorporated. No further discussion was held. The motion was approved unanimously (Mr. Jim Sekely voice voted his approval).

Item Number: PR18-0403	**NBIC Location: Part 4, S6.4 b) 2)**	**Attachment Page 78**
General Description: Specify "Authorized Nuclear Inspection Agency" instead of "Authorized Inspection Agency" in the referenced paragraph **MC Meeting Action:** Mr. Beirne introduced the comment and the changes being proposed. A motion was made and seconded to move forward with Response 1: Accepted, Changes are Incorporated. Mr. Paul Edwards pointed out an error in NB16-0603 that should be addressed at the next NBIC meeting. The motion was approved unanimously.		

5. Future Meetings

December 13th – Webex meeting to do a final approval of all changes
January 14-17, 2019 – San Antonio, TX
July 15-18, 2019 – Kansas City, MO

6. Adjournment

A motion was made, seconded, and approved to adjourn the meeting at 3:05 p.m. Eastern Daylight Time.

Respectfully submitted,

Jonathan Ellis

Jonathan Ellis
NBIC Secretary

PR18-0101

National Board of Boiler and Pressure Vessel Inspectors
National Board Inspection Code
Submission of Public Review Comment
2019 Draft Edition

PLEASE SUBMIT ONLY ONE COMMENT/RECOMMENDATION PER PAGE
Make additional copies as needed

Comments Must be Received No Later Than: October 15, 2018

Instructions: If unable to submit electronically, please print this form and fax or mail. Print or type clearly.

Date: Sep. 10, 2018

Commenter Name: Alex Garbolevsky

Commenter Address: Hartford Steam Boiler
One State St., 8th Flr., Hartford, CT 06102-5024

Commenter Phone: (860) 722-5098

Commenter Fax: none

Commenter Email: alex_garbolevsky@hsb.com

Section/Subsection Referenced: NBIC Part 1, 1.6.3 (NB16-0905)

Comment/Recommendation: *Proposed Solution:* ☐ New Text ■ Revise Text ☐ Delete Text

Comment: Not all pressure vessels are fired or electrically heated. Would it be more appropriate to use "fired or electrically heated pressure vessels" rather than "pressure vessels" in this text?

Source: ■ Own Experience/Idea ☐ Other Source/Article/Code/Standard _____

Submit Form To: Jonathan Ellis, NBIC Secretary, The National Board of Boiler & Pressure Vessel Inspectors, 1055 Crupper Avenue, Columbus, OH 43229, email: jellis@nationalboard.org

NB Use Only

Commenter No. Issued: _____ Project Committee Referred To:

Comment No. Issued: _____ _____

NB16-2801 Part 1, 1.4.1	c) Unless otherwise specifically required by the Jurisdiction, the duties of the inservice inspector do not include the installation's compliance ~~to~~ with manufacturer's recommendations or applicability of, or compliance with, other standards and requirements (e.g., environmental, construction, electrical, undefined industry standards, etc.) for which other regulatory agencies have authority and responsibility to oversee.
NB16-0904 **Part 1, 1.6**	**1.6 GENERAL REQUIREMENTS** The following are general requirements for the boilers, potable water heaters, thermal fluid heaters and pressure vessels covered in NBIC Part 1, Section 2, NBIC Part 1 Section 3, NBIC Part 1 Section 4, and NBIC Part 1 Supplement 5. Refer to each referenced section for additional requirements specific to the type of equipment covered by each section.
NB16-0904 **Part 1, 1.6.1**	**1.6.1 SUPPORTS, FOUNDATIONS, AND SETTINGS** Each boiler, potable water heater, thermal fluid heater and pressure vessel and ~~its~~ the associated piping must be safely supported. Design of supports, foundations, and settings shall consider vibration (including seismic where necessary), movement (including thermal expansion and contraction), and loadings (including the weight of the fluid in the system during a pressure test) in accordance with jurisdictional requirements, manufactures recommendations, and/or other industry standards, as applicable.
NB16-0905 **Part 1, 1.6.3**	**1.6.3 EXIT** Two means of exit shall be provided for equipment rooms exceeding 500 sq. ft. (46.5 sq. m) of floor area and containing one or more boilers, potable water heaters, thermal fluid heaters or pressure vessels having a combined fuel capacity of 1,000,000 Btu/hr (293 kW) or more (or equivalent electrical heat input). Each elevation shall be provided with at least two means of exit, each to be remotely located from each other. A platform at the top of a single boiler, potable water heater, thermal fluid heater or pressure vessel is not considered an elevation.
18-55 Part 1, 1.6.6 a)	**1.6.6 VENTILATION AND COMBUSTION AIR** a) The equipment room shall have an adequate air to permit clean, safe combustion, minimize soot formation, and maintain a minimum of 19.5% oxygen in the air of the equipment room and sufficient to maintain ambient temperatures as recommended by the boiler, heater, or vessel manufacturer. The combustion and ventilation air should be supplied by either an unobstructed air opening or by power ventilation or fans. ~~When combustion air is supplied to the boiler by an independent duct, with or~~ ~~without the employment of power ventilators or fans, the duct shall be sized and installed in accordance~~ ~~with the manufacturer's recommendations. However, ventilation for the equipment room must still be~~ ~~considered.~~ b) When combustion air is supplied to the boiler, heater, or vessel by an independent duct, with or without the employment of power ventilators or fans, the duct shall be sized and installed in accordance with the manufacturer's recommendations. However, ventilation for the equipment

PR18-0102

National Board of Boiler and Pressure Vessel Inspectors
National Board Inspection Code
Submission of Public Review Comment
2019 Draft Edition

PLEASE SUBMIT ONLY ONE COMMENT/RECOMMENDATION PER PAGE
Make additional copies as needed

Comments Must be Received No Later Than: October 15, 2018

Instructions: If unable to submit electronically, please print this form and fax or mail. Print or type clearly.

Date: Sep. 10, 2018

Commenter Name: Alex Garbolevsky

Commenter Address: Hartford Steam Boiler
One State St., 8th Flr., Hartford, CT 06102-5024

Commenter Phone: (860) 722-5098

Commenter Fax: none

Commenter Email: alex_garbolevsky@hsb.com

Section/Subsection Referenced: NBIC Part 1, 1.6.9 (NB16-0101)

Comment/Recommendation: *Proposed Solution:* ☐ New Text ■ Revise Text ☐ Delete Text

Comment: Does this also apply to "potable water heaters" and "thermal fluid heaters" which are not specifically mentioned?

Source: ■ Own Experience/Idea ☐ Other Source/Article/Code/Standard

Submit Form To: Jonathan Ellis, NBIC Secretary, The National Board of Boiler & Pressure Vessel Inspectors, 1055 Crupper Avenue, Columbus, OH 43229, email: jellis@nationalboard.org

NB Use Only

Commenter No. Issued: _____ Project Committee Referred To:

Comment No. Issued: _____ _____

	room must still be considered.
NB16-2801 Part 1, 1.6.8	**1.6.8 CHIMNEY OR STACK** Chimneys or stacks shall be installed in accordance with jurisdictional ~~and environmental~~ requirements, manufacturer's recommendations, and/or industry standards, as applicable.
NB16-0101 Part 1, 1.6.9	1.6.9 Carbon Monoxide (CO) Detector/Alarm The owner or user shall install a carbon monoxide (CO) detector/alarm in equipment rooms where fuel fired boilers and/or fuel fired pressure vessels are located in accordance with the authority having Jurisdiction.
NB16-2803 Part 1, 2.5.3.2 f)	f) When existing boiler installations do not include remote emergency shutdown switches, it is not required that these switches be retroactively installed unless required by the Jurisdiction
NB16-2804 Part 1, 2.7.5 p)	p) Boiler blowoff systems ~~shall~~ should be constructed in accordance with the Guide for Blowoff Vessels (NB-27): which can be found on the National Board website, www.nationalboard.org.
17-116 Part 1, 2.9.1	**2.9.1 GENERAL REQUIREMENTS** a) Only direct spring loaded, pilot operated, or power operated pressure relief valves ~~or pilot operated pressure relief valves~~ designed to relieve steam shall be used for steam service. ~~b) Pressure relief valves are valves designed to relieve either steam or water, depending on the application.~~ ~~c~~b) Pressure relief valves shall be manufactured in accordance with a national or international standard. ~~d~~c) Deadweight or weighted-lever pressure relief valves shall not be used. ~~e~~d) For high temperature water boilers, pressure relief valves shall have a closed bonnet, and valve bodies shall not be constructed of cast iron. ~~f~~e) Pressure relief valves with an inlet connection greater than NPS 3 (DN 80) and used for pressure greater than 15 psig (100 kPa), shall have a flanged inlet connection or a welding-end inlet connection. The dimensions of flanges subjected to boiler pressure shall conform to the applicable standards. ~~g~~f) When a pressure relief valve is exposed to outdoor elements that may affect operation of the valve, the valve may be shielded with a cover. The cover shall be properly vented and arranged to permit servicing and normal operation of the valve.
17-117 Part 1, 2.9.1 g)	g) When a pressure relief valve is exposed to outdoor elements that may affect operation of the valve, the valve may be shielded with a cover. The cover shall be ~~properly~~ vented and arranged to permit servicing and normal operation of the valve.

PR18-0201

National Board of Boiler and Pressure Vessel Inspectors
National Board Inspection Code
Submission of Public Review Comment
2019 Draft Edition

PLEASE SUBMIT ONLY ONE COMMENT/RECOMMENDATION PER PAGE
Make additional copies as needed

Comments Must be Received No Later Than: October 15, 2018

Instructions: If unable to submit electronically, please print this form and fax or mail. Print or type clearly.

Date: Sep. 10, 2018

Commenter Name: Alex Garbolevsky

Commenter Address: Hartford Steam Boiler
One State St., 8th Flr., Hartford, CT 06102-5024

Commenter Phone: (860) 722-5098

Commenter Fax: none

Commenter Email: alex_garbolevsky@hsb.com

Section/Subsection Referenced: NBIC Part 2, 2.3.6.2 b) b) 2) (17-153)

Comment/Recommendation: *Proposed Solution:* ☐ New Text ■ Revise Text ☐ Delete Text

Editorial Comment: Replace "a "R" stamp holder" with "an R stamp holder".

Should be:
an "R" stamp holder

Source: ■ Own Experience/Idea ☐ Other Source/Article/Code/Standard

Submit Form To: Jonathan Ellis, NBIC Secretary, The National Board of Boiler & Pressure Vessel Inspectors, 1055 Crupper Avenue, Columbus, OH 43229, email: jellis@nationalboard.org

NB Use Only

Commenter No. Issued: _____ Project Committee Referred To:

Comment No. Issued: _____ _____

	a. UT Acceptance Criteria 1. For line or crevice corrosion, the depth of the corrosion shall not exceed 25% of the required wall thickness. 2. Isolated pits may be disregarded provided that their depth is not more than 50% of the required thickness of the pressure vessel wall (exclusive of any corrosion allowance), provided the total area of the pits does not exceed 7 sq. in. (4,500 sq. mm) within any 8 in. (200 mm) diameter circle, and provided the sum of their dimensions along any straight line within that circle does not exceed 2 in. (50 mm). 3. For a corroded area of considerable size, the thickness along the most critical plane of such area may be averaged over a length not exceeding 10 in. (250 mm). The thickness at the thinnest point shall not be less than 75% of the required wall thickness. b. If the corrosion exceeds any of the above criteria, the following options are available to the owner/user. 1. The owner/user may conduct a complete UT survey of the vessel to verify remaining vessel wall thickness. 2. The vessel shall be removed from service until the vessel is repaired by a "R" stamp holder. 3. The vessel shall be removed from service until it can be de-rated to a lower MAWP subject to review and approval by the Jurisdiction. 4. A fitness-for service analysis is performed by a qualified organization. 5. The vessel is permanently removed from service. 3) Fittings and attachments — Inspect all fittings and attachments for alignment, support, deterioration, damage, and leakage around threaded joints. Any internal attachments such as supports, brackets, or rings shall be visually examined for wear, corrosion, erosion, and cracks; 4) Operation — Check the vessel nameplate to determine the maximum allowed working pressure and temperature of the vessel. Ensure the set pressure of the safety valve does not exceed that allowed on the vessel nameplate and determine that the capacity of the safety valve is greater than the capacity of the compressor. Ensure there is a functioning manual or automatic condensate drain; and 5) Quick-Closure Attachments — Filter-type vessels usually have one quick-type closure head for making filter changes, see NBIC Part 2, 2.3.6.5.
18-7, 18-60 Part 2,	**2.3.6.8 INSPECTION OF PRESSURE VESSELS FOR HUMAN OCCUPANCY (PVHO's)**

PR18-0202

National Board of Boiler and Pressure Vessel Inspectors
National Board Inspection Code
Submission of Public Review Comment
2019 Draft Edition

PLEASE SUBMIT ONLY ONE COMMENT/RECOMMENDATION PER PAGE
Make additional copies as needed

Comments Must be Received No Later Than: October 15, 2018

Instructions: If unable to submit electronically, please print this form and fax or mail. Print or type clearly.

Date: Sep. 10, 2018

Commenter Name: Alex Garbolevsky

Commenter Address: Hartford Steam Boiler
One State St., 8th Flr., Hartford, CT 06102-5024

Commenter Phone: (860) 722-5098

Commenter Fax: none

Commenter Email: alex_garbolevsky@hsb.com

Should be 2.3.6.8 b) 5)

Section/Subsection Referenced: NBIC Part 2, Part 2, 2.3.6.8 a) 5) (18-7,18-60)

Comment/Recommendation: *Proposed Solution:* ☐ New Text ■ Revise Text ☐ Delete Text

General Editorial: For consistency, change spelling of "gauge" throughout NBIC to "gage". "Gage" is already used in NBIC and ASME Codes

Source: ☐ Own Experience/Idea ■ Other Source/Article/Code/Standard e.g. NBIC Part 2, 2.2.10. 4; 2.3.5.1

Submit Form To: Jonathan Ellis, NBIC Secretary, The National Board of Boiler & Pressure Vessel Inspectors, 1055 Crupper Avenue, Columbus, OH 43229, email: jellis@nationalboard.org

NB Use Only

Commenter No. Issued: _____ Project Committee Referred To:

Comment No. Issued: _____ _____

NOTE: 5) should be red, as it is new wording

prevent a chamber occupant from inadvertently blocking the opening.

5) The inlets to all chamber pressure gauge lines should be located where they either protected from possible blockage or fitted with multiple openings.

6) Chamber doors:

a. should operate freely and smoothly. However, doors should not move on their own when released;

b. that close/seal with pressure and which are fitted with "dogs" or other restraints to hold them in place until an initial seal is obtained, shall be fitted with features to prevent the door from maintaining a seal in the event the pressure differential on the door is reversed;

c. should have seals that are supple, free from flat spots, cracking, etc.; and

d. that close/seal against pressure shall have provisions as follows:

1. Positive protection against pressurization of the vessel unless the restraint mechanism is fully engaged. This includes pressurization by back-up methods as well as primary methods; and

2. Positive protection against release of the restraint mechanism unless pressure in the vessel is fully relieved.

c) External Inspection

1) The Inspector should closely examine the external condition of the pressure vessel for corrosion, damage, dents, gouges or other damage.

2) The lower half and the bottom portions of insulated vessels should receive special focus, as condensation or moisture may gravitate down the vessel shell and soak into the insulation, keeping it moist for long periods of time. Penetration locations in the insulation or fireproofing such as saddle supports, sphere support legs, nozzles, or fittings should be examined closely for potential moisture ingress paths. When moisture penetrates the insulation, the insulation may actually work in reverse, holding moisture in the insulation and/or near the vessel shell.

3) Insulated vessels that are run on an intermittent basis or that have been out of service require close scrutiny. In general, a visual inspection of the vessel's insulated surfaces should be conducted once per year.

4) The most common and superior method to inspect for suspected corrosion under insulation (CUI) damage is to completely or partially remove the insulation for visual inspection. The method most commonly utilized to inspect for CUI without insulation removal is by X-ray and isotope radiography (film or digital) or by real time radiography, utilizing

PR18-0206

National Board of Boiler and Pressure Vessel Inspectors
National Board Inspection Code
Submission of Public Review Comment
2019 Draft Edition

PLEASE SUBMIT ONLY ONE COMMENT/RECOMMENDATION PER PAGE
Make additional copies as needed

Comments Must be Received No Later Than: October 15, 2018

Instructions: If unable to submit electronically, please print this form and fax or mail. Print or type clearly.

Date: Sep. 10, 2018

Commenter Name: Alex Garbolevsky

Commenter Address: Hartford Steam Boiler
One State St., 8th Flr., Hartford, CT 06102-5024

Commenter Phone: (860) 722-5098

Commenter Fax: none

Commenter Email: alex_garbolevsky@hsb.com

S12.2 a)

Section/Subsection Referenced: Part 2 S12.2 (NB 16-2809)

Comment/Recommendation: *Proposed Solution:* ☐ New Text ■ Revise Text ☐ Delete Text

Comment: Elsewhere in NBIC, "10 feet" is converted to 3.0 m. rather than 3050 mm. "3.0 m" appears to be consistent with NBIC Parts 1-4, Section 7.3.

Source: ☐ Own Experience/Idea ■ Other Source/Article/Code/Standard NBIC Part 2, S12.2

Submit Form To: Jonathan Ellis, NBIC Secretary, The National Board of Boiler & Pressure Vessel Inspectors, 1055 Crupper Avenue, Columbus, OH 43229, email: jellis@nationalboard.org

NB Use Only

Commenter No. Issued: _____ Project Committee Referred To:

Comment No. Issued: _____ _____

	i) SAFETY VALVE: The boilers minimum relieving capacity shall be computed for the type of fuel used. j) COMPRESSED NATURAL GAS (CNG) vs LIQUID PETROLEUM GAS (LPG): CNG is lighter than air and LPG is heavier than air. The owner or user should understand the properties of the fuels to ensure the gas will not accumulate in the boiler (see Purging above).
NB16-2809 Part 2, S12.2	**S12.2 GENERAL REQUIREMENTS (ENCLOSED AND UNENCLOSED AREAS)** The inspection should verify that LCDSVs are: a) not located within 10 feet (3050 mm) of elevators, unprotected platform ledges or other areas where falling would result in dropping distances exceeding half the container height; b) installed with clearance to satisfactorily allow for filling, operation, maintenance, inspection and replacement of the vessel parts or appurtenances; c) not located on roofs; d) adequately supported to prevent the vessel from tipping or falling~~, and to meet seismic requirements as required by design~~; e) not located within 36 in. (915 mm) of electrical panels; and f) located outdoors in areas in the vicinity of vehicular traffic are protected with barriers designed to prevent accidental impact by vehicles.
18-38 Part 3, 1.1	**PART 3, SECTION 1** **REPAIRS AND ALTERATIONS — GENERAL AND ADMINISTRATIVE REQUIREMENTS** **1.1 SCOPE** a) This part provides requirements and guidelines that apply when performing repairs and alterations to pressure-retaining items. b) The National Board administers ~~three~~ four specific accreditation programs: 1) "R" – Repairs and Alterations to Pressure-Retaining Items 2) "NR" – Repair and Replacement Activities for Nuclear Items 3) "VR" – Repairs to Pressure Relief Valves 4) "T/O" - Test Only of Pressure Relief Valves c) This part describes some of the administrative requirements for the accreditation of repair organizations. Additional administrative requirements can be found in: 1) NB-415, ACCREDITATION OF "R" REPAIR ORGANIZATIONS 2) NB-417, ACCREDITATION OF "NR" REPAIR ORGANIZATIONS 3) NB-514, ACCREDITATION OF "VR" REPAIR ORGANIZATIONS

PR18-0207

National Board of Boiler and Pressure Vessel Inspectors
National Board Inspection Code
Submission of Public Review Comment
2019 Draft Edition

PLEASE SUBMIT ONLY ONE COMMENT/RECOMMENDATION PER PAGE
Make additional copies as needed

Comments Must be Received No Later Than: October 15, 2018

Instructions: If unable to submit electronically, please print this form and fax or mail. Print or type clearly.

Date: Sep. 10, 2018

Commenter Name: Alex Garbolevsky

Commenter Address: Hartford Steam Boiler
One State St., 8th Flr., Hartford, CT 06102-5024

Commenter Phone: (860) 722-5098

Commenter Fax: none

Commenter Email: alex_garbolevsky@hsb.com

S12.2 e)

Section/Subsection Referenced: Part 2 S12.2 (NB 16-2809)

Comment/Recommendation: *Proposed Solution:* ☐ New Text ■ Revise Text ☐ Delete Text

~~Comment: [1] S12.2 a) - Elsewhere in NBIC, "10 feet" is converted to 3.0 m. rather than 3050 mm. "3.0 m" appears to be consistent with NBIC Parts 1-4, Section 7.3.~~

Comment [2] S12.2 e) - "36 in" (3 ft) is converted to 0.9 m. in Part 2, S12.4. "0.9 m" appears to be consistent with NBIC Parts 1-4, Section 7.3.

NOTE: Comment 1 was address in PR18-0206

Source: ☐ Own Experience/Idea ■ Other Source/Article/Code/Standard NBIC Part 2, S12.4

Submit Form To: Jonathan Ellis, NBIC Secretary, The National Board of Boiler & Pressure Vessel Inspectors, 1055 Crupper Avenue, Columbus, OH 43229, email: jellis@nationalboard.org

NB Use Only

Commenter No. Issued: _____ Project Committee Referred To:

Comment No. Issued: _____ _____

	i) SAFETY VALVE: The boilers minimum relieving capacity shall be computed for the type of fuel used. j) COMPRESSED NATURAL GAS (CNG) vs LIQUID PETROLEUM GAS (LPG): CNG is lighter than air and LPG is heavier than air. The owner or user should understand the properties of the fuels to ensure the gas will not accumulate in the boiler (see Purging above).
NB16-2809 Part 2, S12.2	**S12.2 GENERAL REQUIREMENTS (ENCLOSED AND UNENCLOSED AREAS)** The inspection should verify that LCDSVs are: a) not located within 10 feet (3050 mm) of elevators, unprotected platform ledges or other areas where falling would result in dropping distances exceeding half the container height; b) installed with clearance to satisfactorily allow for filling, operation, maintenance, inspection and replacement of the vessel parts or appurtenances; c) not located on roofs; d) adequately supported to prevent the vessel from tipping or falling~~, and to meet seismic requirements as required by design~~; e) not located within 36 in. (915 mm) of electrical panels; and f) located outdoors in areas in the vicinity of vehicular traffic are protected with barriers designed to prevent accidental impact by vehicles.
18-38 Part 3, 1.1	**PART 3, SECTION 1** **REPAIRS AND ALTERATIONS — GENERAL AND ADMINISTRATIVE REQUIREMENTS** **1.1 SCOPE** a) This part provides requirements and guidelines that apply when performing repairs and alterations to pressure-retaining items. b) The National Board administers ~~three~~ four specific accreditation programs: 1) "R" – Repairs and Alterations to Pressure-Retaining Items 2) "NR" – Repair and Replacement Activities for Nuclear Items 3) "VR" – Repairs to Pressure Relief Valves 4) "T/O" - Test Only of Pressure Relief Valves c) This part describes some of the administrative requirements for the accreditation of repair organizations. Additional administrative requirements can be found in: 1) NB-415, ACCREDITATION OF "R" REPAIR ORGANIZATIONS 2) NB-417, ACCREDITATION OF "NR" REPAIR ORGANIZATIONS 3) NB-514, ACCREDITATION OF "VR" REPAIR ORGANIZATIONS

PR18-0208

National Board of Boiler and Pressure Vessel Inspectors
National Board Inspection Code
Submission of Public Review Comment
2019 Draft Edition

PLEASE SUBMIT ONLY ONE COMMENT/RECOMMENDATION PER PAGE
Make additional copies as needed

Comments Must be Received No Later Than: October 15, 2018

Instructions: If unable to submit electronically, please print this form and fax or mail. Print or type clearly.

Date: September 24, 2018

Commenter Name: Gary L. Scribner

Commenter Address: 1055 Crupper Ave.
Columbus, Oh 43229

Commenter Phone: 614-888-8320

Commenter Fax: 614-847-1828

Commenter Email: gscribner@nationalboard.org

Section/Subsection Referenced: Part 2, 2.6, 2.7, 2.8, S14

Comment/Recommendation: *Proposed Solution:* ☐ New Text ☐ Revise Text ■ Delete Text

The proposed wording under item NB17-0403, 18-70, 18-71, & 18-72 dealing with the T/O Accreditation Program is not an inservice inspection activity, so this working should be limited to NBIC Part 4 and should not be included in NBIC Part 2.

Source: ■ Own Experience/Idea ☐ Other Source/Article/Code/Standard

Submit Form To: Jonathan Ellis, NBIC Secretary, The National Board of Boiler & Pressure Vessel Inspectors, 1055 Crupper Avenue, Columbus, OH 43229, email: jellis@nationalboard.org

NB Use Only

Commenter No. Issued: _____ Project Committee Referred To:

Comment No. Issued: _____ _____

	5) PVHO-2 Form VP-1 Viewport Inspection (one for each window, current within PVHO-2 requirements). 6) For any repaired windows, PVHO-2 Form VP-2 Acrylic Window Repair Certificate for Windows. Repaired by the User (or his Authorized Agent) or PVHO-2 Form VP-3 Acrylic Window Repair Certificate for Severely Damaged Windows. h) All PVHOs under the jurisdiction of the U.S. Coast Guard must also comply with 46 CFR Part 197.
NB17-0201 Part 2, 2.3.6.10 c) 1)	c) Record keeping 1) Since these vessels have a finite fatigue life, ~~it is essential~~ a record shall be maintained of each operating cycle, recording both temperature and pressure. Deviation beyond design limits is cause for suspending operation and reevaluation of remaining fatigue life. Vessels having no operating record should ~~shall~~ be inspected and a fracture mechanics evaluation with a fatigue analysis test be performed to establish remaining life before resuming operation. Vessels having no operating record shall not be used for service until such time as previous operating history can be determined.
NB16-3101 Part 2, 2.5.7.2 a)	a) If a set pressure test indicates the valve does not open within the requirements of the original code of construction, but otherwise is in acceptable condition, minor adjustments (defined as no more than twice the permitted set pressure tolerance) shall be made by a ~~qualified organization accredited by the~~ National Board "VR" or "T/O" Certificate Holder to reset the valve to the correct opening pressure. All adjustments shall be resealed with a seal identifying the responsible organization and a tag shall be installed identifying the organization and the date of the adjustment. ~~Qualified organizations are considered to be National Board "VR" Certificate Holders, or organizations authorized by the Jurisdiction to make adjustments. See Supplement 3 for more information.~~
NB16-3101 Part 2, 2.5.8.2	**2.5.8.2 ESTABLISHMENT OF SERVICE INTERVALS** b) Pressure relief valves are mechanical devices that require periodic preventive maintenance even though external inspection and test results indicate acceptable performance. There may be wear on internal parts, galling between sliding surfaces, internal corrosion, or fouling which will not be evident from an external inspection or test. Periodic re-establishment of seating surfaces and the replacement of soft goods such as o-rings and diaphragms are also well advised preventive maintenance activities that can prevent future problems. If the valve is serviced, a complete disassembly, internal inspection, and repair as necessary, such that the valve's condition and performance are restored to a like new condition, should be done by a National Board "VR" Certificate Holder.~~an organization accredited by the National Board.~~
NB17-0403, 18-70, 18-71, 18-72	**2.6 ACCREDITATION OF "T/O" TEST ONLY ORGANIZATIONS** **2.6.1 SCOPE**

Part 2, 2.6, 2.7, 28. S14 (Part 4, 1.4, 3.3, 3.4, 3.5, 4.1, 4.2, 4.7.4, S7)	a) This section provides requirements that must be met for an organization to obtain a National Board Certificate of Authorization to use the "T/O" Certification Mark for in-service testing and performing minor adjustments of pressure relief valves constructed in accordance with the requirements of the ASME Code. b) For administrative requirements to obtain or renew a National Board "T/O" Certificate of Authorization and "T/O" Certification Mark, refer to NB-528, Accreditation of "T/O" Test Only Organizations. c) Authorization to use the official National Board "T/O" Certification Mark as shown in Figure 2.8.2-a), will be granted by the National Board provided the requirements of the administrative rules in NB-528 and the NBIC are met. **2.6.2 JURISDICTIONAL PARTICIPATION** The National Board member jurisdiction in which the "T/O" organization is located is encouraged to participate in the review and demonstration of the applicant's quality system. The Jurisdiction may require participation in the review of the testing organization and the demonstration and acceptance of the repair organization's quality system manual. **2.6.3 QUALITY SYSTEM** **2.6.3.1 GENERAL** Each applicant for a new or renewed "T/O" *Certificate of Authorization* shall have and maintain a quality system which shall establish that all of these rules and administrative procedures and applicable ASME Code requirements, testing, inspection, sealing, and applying the T/O certification mark will be met. **2.6.3.2 WRITTEN DESCRIPTION** A written description, in the English language, of the system the applicant will use shall be available for review and shall contain, as a minimum, the features set forth in 2.6.3.4. This description may be brief or voluminous, depending upon the projected scope of work, and shall be treated confidentially. In general, the quality system shall describe and explain what documents and procedures the testing firm will use to validate a test and/or

minor adjustment.

2.6.3.3 MAINTENANCE OF A CONTROLLED COPY

Each applicant to whom a "T/O" *Certificate of Authorization* is issued shall maintain thereafter a controlled
copy of the accepted quality system manual with the National Board. Except for changes that do not affect the quality system, revisions to the quality system manual shall not be implemented until such revisions are accepted by the National Board.

2.6.3.4 OUTLINE OF REQUIREMENTS FOR A QUALITY SYSTEM

The following establishes the minimum requirements of the written description of the quality system. It is required that each testing organization develop its own quality system that meets the requirements of its organization. For this reason it is not possible to develop one quality system that could apply to more than one organization. The written description shall include, as a minimum, the following features:

a) Title Page

The title page shall include the name and address of the company to which the National Board Certificate of Authorization is to be issued.

b) Revision Log

A revision log is required to ensure revision control of the quality system manual. The log should contain sufficient space for date, description and section of revision, company approval, and National Board acceptance.

c) Contents Page

The contents page should list and reference, by section paragraph or page number, the subjects and exhibits contained therein.

d) Statement of Authority and Responsibility

A statement of authority and responsibility shall be dated and signed by an officer of the company. It shall include:

1) A statement that the "T/O" Certification Mark shall be used only for pressure relief valves that meet the following conditions:

a. Are marked with an ASME "V", "UV", or "HV" Code symbol or marked with the ASME Certification Mark with "V", "UV", or "HV" designator and have been capacity certified by the National Board;

b. Have been visually inspected, and successfully tested in accordance with this program; and

c. Only external adjustments to restore the nameplate set pressure and/or performance of a pressure relief valve shall be made under the provisions of this program. If disassembly, change of set pressure, or additional repairs are necessary, the valve shall be repaired by a National Board "VR" Certificate Holder or replaced.

2) The title of the individual responsible for ensuring that the quality system is followed and who has authority and freedom to affect the responsibility;

3) A statement that if there is a disagreement in the implementation of the written quality system, the matter is to be referred to a higher authority in the company for resolution; and

4) The title of the individual authorized to approve revisions to the written quality system and the method by which such revisions are to be submitted to the National Board for acceptance before implementation.

e) Organization Chart

A chart showing the relationship between management, inspection, testing, and quality control personnel is required and shall reflect the actual organization in place.

f) Scope of Work

1) The scope of work section shall indicate the scope and type of valve testing the organization is capable of and intends to perform. The location of testing (shop, shop and field, or field only), ASME Code Section(s) to which the tests apply, and the test medium (air, gas, liquid, or steam, or combinations thereof) shall be included.

2) The types and sizes of valves to be tested, pressure ranges and other limitations shall also be addressed.

g) Specification Control

The specification control system shall provide procedures assuring that the latest applicable specifications and instructions required are used for valve inspection and testing.

h) Inspection and Testing Program

The inspection and testing program section shall include reference to a

document (such as an inspection and test report, or checklist) that outlines the specific inspection and testing procedures used in the testing of pressure relief valves. Provisions shall be made to retain this document for a period of at least five years.

1) Each valve or group of valves shall be accompanied by the document referred to above for processing through the plant. Each valve shall have a unique identifier assigned by the Test Only organization (e.g., job serial number, shop order number, work order number, etc.) appearing on the test documentation and test nameplate such that traceability is established.

2) The document referred to above shall describe the original nameplate information, including the ASME Code symbol stamping and, if applicable, the repair nameplate information. In addition, it shall include pressure test methods to be used. Application of the "T/O" Certification Mark to the test nameplate shall be recorded in this document. There shall be a space for "signoffs" at each operation to verify that each step has been properly performed by qualified personnel.

3) The system shall also describe the controls used to ensure that any personnel engaged in the testing of pressure relief valves are trained and qualified in accordance with 2.7.

i) Valve Adjustment and Sealing

1) The system shall include provisions that each pressure relief valve requiring adjustment as permitted by 2.5.7.2 shall have existing seal(s) removed only for the required adjustment(s), be tested, set, and external adjustment(s) re-sealed according to the requirements of the applicable ASME Code Section and the NBIC. The seal shall identify the "T/O" Certificate Holder performing the test or making the adjustment. Abbreviations or initials are permitted, provided such identification is defined in the quality system and acceptable to the National Board.

2) The system shall include provisions that each pressure relief valve requiring the use of a Lift Assist Device for testing as permitted by 2.5.7 c) may have the seal(s) removed for testing. Upon completion of testing, external adjustments shall be re-sealed in accordance with i) 1) above.

j) Test Only Nameplates

The quality system shall include a description of a nameplate or a drawing. An

effective valve marking system shall be established to ensure proper marking and nameplate attachment for each valve as required by 2.8.2. The manual shall include a description of the nameplate or a drawing

k) Calibration

1) The quality system shall describe a system for the calibration of examination, measuring, and test equipment used in the performance of testing. Documentation of these calibrations shall include the standard used and the results.

2) All calibration standards shall be calibrated against certified equipment having known valid relationships to nationally recognized standards.

l) Manual Control/Procedures

The quality system manual and referenced procedures shall include:

1) Measures to control the issuance of and revisions to the quality system manual;

2) Provisions for a review of the system in order to maintain the manual current with these rules and the applicable sections of the ASME Code and NBIC;

3) The title(s) of the individual(s) responsible for preparation, revision distribution, approval, and implementation of the quality system manual;

4) Provision of a controlled copy of the written quality system manual to be submitted to the National Board for acceptance prior to implementation; and

5) Revisions shall be submitted for acceptance by the National Board prior to being implemented.

m) Nonconformities

The quality system shall establish measures for the identification, documentation, evaluation, segregation, and disposition of nonconformities. A non-conformity is a condition of any material, item, product, or process in which one or more characteristics do not conform to the established requirements. These may include, but are not limited to, data discrepancies, procedural and/or documentation deficiencies, or material defects. Also, the title(s) of the individual(s) involved in this process shall be included.

n) Testing Equipment (See NBIC Part 4, Supplement 5)

The quality system shall include a means to control the development, addition, or modification of testing equipment to ensure the requirements of NBIC Part 4, 4.6.1 b) are met.

o) Field Testing

If field testing is included in the scope of work, the system shall address any differences or additions to the quality system required to properly control this activity, including the following:

1) Provisions for annual audits of field activities shall be included;

2) Provisions for use of owner-user measurement and test equipment, if applicable, shall be addressed.

p) Records Retention

The quality manual shall describe a system for filing, maintaining, and easily retrieving records supporting or substantiating the administration of the Quality System within the scope of the "VR" Certificate of Authorization. The record retention schedule described in the Quality System Manual is to follow the instructions identified in Table 2.6.3.4 p).

q) Exhibits

Forms used in the quality system shall be included in the manual with a written description. Forms exhibited ~~shall~~should be marked "SAMPLE" and completed in a manner typical of actual valve testing procedures.

Table 2.6.3.4p)

Reports, Records, or Documents for "T/O" Certificate Holders	**Instructions**	**Minimum Retention Period**
a) Record of testing or inspection	The testing and inspection program section shall include reference to a document (such as a report, traveler, or checklist) that outlines the specific testing and inspection procedures used in the testing of pressure relief valves.	5 years

	b) Records related to equipment qualification and instrument calibration	Prior to use, all performance testing equipment shall be qualified by the certificate holder to ensure that the equipment and testing procedures will provide accurate results when used within the ranges established for that equipment. This qualification may be accomplished by benchmark testing, comparisons to equipment used for verification testing as specified in the quality system, or comparisons to field performance.	5 years after the subject piece of equipment or instrument is retired.	
	c) Record of lift assist device qualification	Prior to use, all lift assist devices shall be qualified by the certificate holder to ensure that the equipment and testing procedures will provide accurate results when used within the ranges established for that equipment used for verification testing as specified in the quality system or comparisons to field performance. This qualification shall be documented.	5 years after the lift assist device is retired.	
	d) Records of employee training and qualification	Each testing organization shall establish minimum qualification requirements for those positions within the organization as they directly relate to pressure relief valve testing. Each testing	5 years after termination of employment.	

	organization shall document the evaluation and acceptance of an individual's qualification for the applicable position.		

2.6.4 TESTING & ADJUSTMENT

a) Each Pressure Relief Valve to be tested shall be inspected in accordance with Section 2.5.3.

b) Pressure Relief Valves with missing or illegible nameplates shall not be tested under the T/O program and shall be referred to a VR Certificate Holder or replaced.

c) Pressure Relief Valves shall be tested to confirm that the Set Pressure (defined as the average of at least three consecutive tests) is within the allowable tolerance specified by the applicable ASME Code Section and NBIC. Test Results, including Test Gauge Identification, shall be recorded on the document referred to above. Pressure Relief Valve seals shall not be removed unless required for adjustment or testing using a lift assist device.

d) Testing organizations may obtain a "T/O" Certificate of Authorization for field testing, either as an extension to their in-shop/plant scope, or as a field-only scope, provided that the Quality System includes the following provisions:

1) Qualified technicians in the employ of the certificate holder perform such testing;

2) An acceptable quality system covering field testing, including field audits is maintained; and

3) Functions affecting the quality of the tested valves are supervised from the address of record where the "T/O" certification is issued.

2.6.4.1 AUDIT REQUIREMENTS

Upon issuance of a Certificate of Authorization, provided field tests are performed, annual audits of the work carried out in the field shall be performed to ensure that the requirements of the certificate holder's quality

system are met. The audit shall include, but not be limited to, performance testing, in accordance with NBIC Part 4, 4.6, of valve(s) that were tested in the field. The audits shall be documented.

2.7 TRAINING AND QUALIFICATION OF PERSONNEL

2.7.1 CONTENTS OF TRAINING PROGRAM

The applicant shall establish a documented in-house training program. This program shall establish training objectives and provide a method of evaluating the training effectiveness. As a minimum, training objectives for knowledge level shall include:

a) Applicable ASME Code and NBIC requirements;

b) Responsibilities within the organization's quality system;

c) Knowledge of the technical aspects and mechanical skills for making set pressure and/or blowdown adjustments to pressure relief valves;

d) Knowledge of the technical aspects and mechanical skills for marking and sealing of pressure relief valve adjustments.

2.8 MARKING REQUIREMENTS FOR VALVES TESTED UNDER THE T/O PROGRAM

2.8.1 NAMEPLATES

Proper marking and identification of tested valves is critical to ensuring acceptance during subsequent inspections, and also provide for traceability and identification to the valve. All operations that require the valve's seals to be replaced shall be identified by a nameplate as described in 2.8.2.

2.8.2 TEST ONLY NAMEPLATE & VALVE SEALING

When a pressure relief valve is tested, a metal test only nameplate marked with the information required below shall be securely attached to the valve adjacent to the original manufacturer's stamping or nameplate and/or repair nameplate. If not installed directly on the valve, the nameplate shall be securely attached to the valve independent of the external adjustment seals in a manner that does not to interfere with valve operation and sealed in accordance with the quality system.

a) Existing manufacturer/assembler and VR nameplates if applicable shall not be removed

b) Existing manufacturer/assembler, VR, and/or TO seals shall remain in place unless removal is required to perform testing or adjustment.

Following testing, the valve shall be resealed by the responsible T/O Certificate Holder.

c) Any previous test only nameplates shall be removed.

d) As a minimum, the information on the T/O nameplate (see Figure 2.8.2-a) shall include:

1) The name of responsible organization preceded by the words "Tested by" shall be applied

2) Date of test shall be applied

3) Set pressure shall be applied

4) Unique identifier of test shall be applied (eg. shop order number, work order number, job serial number, etc.)

5) The T/O Certification Mark as provided by the National Board

T/O

FIGURE 2.8.2-a

REQUIRED MARKINGS FOR TESTING OF ASME/NATIONAL BOARD "V," "UV," AND "HV" -
STAMPED PRESSURE RELIEF VALVES UNDER THE T/O PROGRAM

TESTED BY CERTIFICATE HOLDER

DATE OF TEST
®

SET PRESSURE

UNIQUE IDENTIFICATION

NATIONAL BOARD "T/O"
CERTIFICATE NUMBER

SUPPLEMENT 14
RECOMMENDED PROCEDURES FOR TEST ONLY OF PRESSURE RELIEF VALVES

S14.1 INTRODUCTION

a) It is essential that the test only organization establish basic, specific procedures for the testing of pressure relief valves. The purpose of these recommended procedures is to provide the test only organization with guidelines for this important aspect of valve testing. It is realized that there are many types of valves and conditions under which they are tested and, for this reason, the specific items in these recommended procedures may not apply, or they may be inadequate for each of those types or to the detailed test procedures that may be required for each valve.

b) If the valve is to be bench tested, ensure that all sources of pressure have been removed from the valve prior to removal from service. If the valve is to be field tested using system pressure, ensure that all sources of pressure are under the control of the person performing the test.

c) S14.2 contains recommended procedures for the test only of spring-loaded and pilot operated pressure relief valves.

S14.2 PRESSURE RELIEF VALVES

~~Prior to field testing of a relief valve using system pressure or removal for bench testing, ensure that all sources of pressure have been removed from the valve.~~

a) Visual inspection

1) This information is to be recorded

a) Record user (customer) identification number;

b) Complete original PRV nameplate data, previous VR repair nameplate data, previous T/O test only nameplate data plus any important information received from customer.

c) If nameplate is missing, illegible or has incorrect information, it shall not be tested. Relief valve should be sent to VR repair shop per Part 4, 4.7.5

2) Check external adjustment seals are installed and match manufacturer and/or VR – T/O nameplate.

3) Check bonnet for venting on bellows type valves.

4) Check appearance for any unusual damage, missing, or misapplied parts. If sufficient damage or other unusual conditions are detected that may pose a safety risk during testing, set aside for review by Quality Department.

b) Existing Nameplate

1) An existing VR Nameplate, if applicable, shall not be removed from the relief valve

2) An existing TO Nameplate shall be removed from the relief valve

c) Relief Valve Data

1) "Set Pressure Definition" shall be obtained from National Board Document # NB-18

	2) ~~CDTP (Cold Differential Test Pressure).~~ Manufacturer's steam to air correction factor, if applicable, shall be obtained from Manufacturer. d) Set Pressure Test 1) If set pressure test indicates the valves opens within the requirements of the original code of construction. Proceed to Seat Tightness. 2) If set pressure test indicates the valve does not open within the requirements of the original code of construction, but opens within twice the set pressure tolerance allowed per the requirements of the original code of construction and is otherwise ~~is~~ in acceptable condition, set pressure restoration (defined as no more than twice the permitted set pressure tolerance) shall be made. Proceed to Seat Tightness. 3) If set pressure test indicates the valve does not open within twice the set pressure tolerance allowed per the requirements of the original code of construction, valve should be sent to a VR shop for repair or scrapped. e) Seat Tightness 1) Seat tightness must be tested at a level which meets the requirements of the end user. f) Sealing 1) After completion of set pressure test, set pressure restoration (if applicable) and seat tightness testing, all external adjustments shall be sealed in accordance with the original code of construction with a seal providing a means of identification of the organization performing the set pressure test. g) T/O Nameplate 1) The tester shall prepare a T/O nameplate for each valve tested. 2) The nameplate shall, as a minimum, meet the requirements of 2.8.2 a) 3) Nameplate shall be installed onto valve independent of sealing used for external adjustments and/or VR nameplate attachment. 4) Nameplate shall receive a safety seal providing a means of identification of the organization performing the set pressure testing.
17-164 Part 2, 4.3.1.2	4.3.1.2 LIQUID PRESSURE TESTING Test pressure should be selected or adjusted in agreement between the Inspector and owner or user.

PR18-0301

National Board of Boiler and Pressure Vessel Inspectors
National Board Inspection Code
Submission of Public Review Comment
2019 Draft Edition

PLEASE SUBMIT ONLY ONE COMMENT/RECOMMENDATION PER PAGE
Make additional copies as needed

Comments Must be Received No Later Than: October 15, 2018

Instructions: If unable to submit electronically, please print this form and fax or mail. Print or type clearly.

Date: Sep. 10, 2018

Commenter Name: Alex Garbolevsky

Commenter Address: Hartford Steam Boiler
One State St., 8th Flr., Hartford, CT 06102-5024

Commenter Phone: (860) 722-5098

Commenter Fax: none

Commenter Email: alex_garbolevsky@hsb.com

Section/Subsection Referenced: Part 3, 1.6.8.2 j)(NB 17-168)

Comment/Recommendation: *Proposed Solution:* ☐ New Text ■ Revise Text ☐ Delete Text

Editorial correction to existing text: "Certificate Holders" should be corrected to "Certificate Holder's".

PM Proposed Response - Accept w/ changes incorporated. Agreed this is editorial, however it should be noted that this is existing text dating from the 2015 Edition, i.e. not part of the action under 17-168.

Source: ■ Own Experience/Idea ☐ Other Source/Article/Code/Standard

Submit Form To: Jonathan Ellis, NBIC Secretary, The National Board of Boiler & Pressure Vessel Inspectors, 1055 Crupper Avenue, Columbus, OH 43229, email: jellis@nationalboard.org

NB Use Only

Commenter No. Issued: _____ Project Committee Referred To:

Comment No. Issued: _____ _____

quantitative or qualitative ~~qualified~~ acceptance criteria to determine activities are satisfactorily accomplished.

g) Document Control

Shall define measures to control the preparation, issuance, use, review, approval, revisions and distribution of all documents, including procedures, instructions and drawings related to quality. Responsibilities shall be described within the quality program.

h) Control of Purchased~~s~~, Materials, Items and Services

Purchased material, items and services shall conform to the procurement documents. Measures shall be established for source evaluation and selection, objective evidence of quality, inspections at the source and examination of products upon delivery. Effectiveness of quality of suppliers shall be assessed by the applicant or designee at specified intervals. Documented evidence shall be performed and made available to assure materials and services conform to procurement documents, quality procedures and instructions.

i) Identification and Control of Items

Specified controls shall ensure only correct and acceptable items, parts and components are used and installed and traceable to required documents such as certified material test reports, certificates of conformance, or data reports. These controls shall include traceability on the items or on records traceable to the items during fabrication and final acceptance and test.

j) Control of Processes

Documents used to control processes shall be prepared, including the document numbers and revision to which the process conforms and ~~conform to specified acceptance criteria~~ shall include space for providing reporting of results of specific operations at checkpoints of repair/replacement activity, and provide for signatures, initials, stamps and dates for activities performed by the Certificate Holders' representative and the Authorized Nuclear Inspector. Special processes including welding, nondestructive examinations, heat treating, and bending are performed using qualified and approved procedures and qualified personnel in accordance with applicable codes, standards and other specified criteria.

k) Examinations, Tests and Inspections

A repair / replacement plan, developed in accordance with Table 1.6.9, shall address all required information for performing examinations, tests and inspections including but not limited to:

1) Establishing hold points

2) Identifying procedures, methods, acceptance criteria

3) Defects identified, removal methods, welding, brazing, fusing, and material

PR18-0302

National Board of Boiler and Pressure Vessel Inspectors
National Board Inspection Code
Submission of Public Review Comment
2019 Draft Edition

PLEASE SUBMIT ONLY ONE COMMENT/RECOMMENDATION PER PAGE
Make additional copies as needed

Comments Must be Received No Later Than: October 15, 2018

Instructions: If unable to submit electronically, please print this form and fax or mail. Print or type clearly.

Date: Sep. 10, 2018

Commenter Name: Alex Garbolevsky

Commenter Address: Hartford Steam Boiler
One State St., 8th Flr., Hartford, CT 06102-5024

Commenter Phone: (860) 722-5098

Commenter Fax: none

Commenter Email: alex_garbolevsky@hsb.com

Section/Subsection Referenced: Part 3, 1.6.8.2 p) 1) (NB 17-168)

Comment/Recommendation: *Proposed Solution:* ☐ New Text ■ Revise Text ☐ Delete Text

Editorial correction: "non-conformances" should be shown as "nonconformances" for consistency. The entire text should be searched for consistent spelling of "nonconformances", "nonconformity" and similar words. ASME NQA-1 uses the word without hyphenation (e.g. NQA-1-2009a-1a, Part I, Requirement 7, para. 600).

PM Proposed Response - Accept w/ changes incorporated. Agreed this is editorial and consistent w/ use of the term nonconformance w/o the hyphen throughout the text.

Source: ☐ Own Experience/Idea ■ Other Source/Article/Code/Standard NQA-1-2009a-1a, Part I, Requirement 7, para. 600

Submit Form To: Jonathan Ellis, NBIC Secretary, The National Board of Boiler & Pressure Vessel Inspectors, 1055 Crupper Avenue, Columbus, OH 43229, email: jellis@nationalboard.org

NB Use Only

Commenter No. Issued: _____ Project Committee Referred To:

Comment No. Issued: _____ _____

~~1)~~2) The original of the completed Form NR-1 or Form NVR-1, as applicable, shall be registered with the National Board and, if required, a copy forwarded to the Jurisdiction where the nuclear power plant is located. A log for registration shall be maintained in accordance with NBIC Part 3, 5.6.

p) Corrective Action

1) Measures shall be established to ensure that conditions adverse to quality such as failures, malfunctions, deficiencies, deviations, defective material and equipment, and other non-conformances are promptly identified and corrected.
2) In the case of significant conditions adverse to quality, the measures shall also ensure that the cause of these conditions be determined and corrected to preclude repetition. The identification of significant conditions adverse to quality, the cause, condition, and the corrective action taken shall be documented and reported to the appropriate levels of management.
3) Corrective action requirements shall also extend to the performance of subcontractors' activities.

~~Measures established to assure conditions adverse to quality are promptly identified and corrected and action taken to preclude repetition.~~

q) Inspection or Test Status

Measures shall be established to indicate inspection and test status of parts, items or components during repair/replacement activity. Measures shall include identification, procedures, control indicators (acceptable, unacceptable) and responsibility of personnel.

r) Nonconforming Material or Items

Measures to control material or items, nonconforming to specified criteria shall be established. Measures shall include identifying, controlling, documenting, reviewing, verifying, dispositioning and segregation when practical.

s) Audits

~~A system of planned and periodic audits shall be established to verify compliance of the Quality Assurance Program. Audits shall include; written procedures, checklists, trained/qualified personnel not having direct responsibility for areas being audited, documentation, review by management and follow up actions when required.~~ A comprehensive system of planned and periodic audits of the "NR" Certificate Holder's Quality Assurance Program shall be performed. Audits shall include internal audits by the Certificate Holder and audits by the Authorized Inspection Agency. Audit frequency shall be specified in the organization's Quality Assurance Manual. Audits shall be conducted at least annually to verify compliance with Quality Assurance Program requirements, performance criteria and to determine the effectiveness of the Quality Assurance Program. When no code work has been performed, the required annual audit need only include those areas of responsibility required to be continually maintained such as training, audits, organizational structure, Quality Assurance Program revisions, etc. The Quality Assurance Manual shall as a minimum describe the following:

PR18-0303

National Board of Boiler and Pressure Vessel Inspectors
National Board Inspection Code
Submission of Public Review Comment
2019 Draft Edition

PLEASE SUBMIT ONLY ONE COMMENT/RECOMMENDATION PER PAGE
Make additional copies as needed

Comments Must be Received No Later Than: October 15, 2018

Instructions: If unable to submit electronically, please print this form and fax or mail. Print or type clearly.

Date: Sep. 10, 2018

Commenter Name: Alex Garbolevsky

Commenter Address: Hartford Steam Boiler
One State St., 8th Flr., Hartford, CT 06102-5024

Commenter Phone: (860) 722-5098

Commenter Fax: none

Commenter Email: alex_garbolevsky@hsb.com

Section/Subsection Referenced: Part 3, 1.6.6.2 l), 1.6.7.2 l) & 1.6.8.2 l) (NB 16-0609)

Comment/Recommendation: *Proposed Solution:* ☐ New Text ■ Revise Text ☐ Delete Text

Editorial corrections: Revise "NR Certificate Holder' Quality Program" to ""NR" Certificate Holder's Quality Program".

PM Proposed Response - Accept w/ changes incorporated. Agreed this is editorial, w/ corrections applied to both the quotation marks on "NR" and the possessive use of Holder's

Source: ■ Own Experience/Idea ☐ Other Source/Article/Code/Standard

Submit Form To: Jonathan Ellis, NBIC Secretary, The National Board of Boiler & Pressure Vessel Inspectors, 1055 Crupper Avenue, Columbus, OH 43229, email: jellis@nationalboard.org

NB Use Only

Commenter No. Issued: _____ Project Committee Referred To:

Comment No. Issued: _____ _____

	~~c. "NR" Certificate Holder shall specify that calibration reports shall include, laboratory equipment/ standards used and as found and as left data;~~ ~~d. The "NR" Certificate Holder shall verify conformance to the requirements of this process; and e. Utilization of this process shall be described and documented in the "NR" Certificate Holders QAM.~~ **1.6.7.2 – Quality Program Elements (Category 2)** **l) Control of Measuring and Tests Elements** ~~Control of Measuring and Test Equipment Measures shall be established and documented to ensure that tools, gages, instruments, and other measuring and testing equipment and devices used in activities affecting quality are of the proper range, type, and accuracy to verify conformance to established requirements. A procedure shall be in effect to ensure that they are calibrated and properly adjusted at specified periods or use intervals to maintain accuracy within specified limits. Calibration shall be traceable to known national standards, where these standards exist, or with the device manufacturer's recommendation.~~ **1.6.8.2 – Quality Program Elements (Category 3)** **l) Control of Measuring and Test Equipment** ~~Control of Measuring and Test Equipment Procedures, methods and frequency of calibration shall be described for all types of measuring and test equipment used to verify quality. Any discrepancies shall be identified and resolved.~~ 1.6.6.2 l), 1.6.7.2 l), 1.6.8.2 l) Add to Category 1, 2, and 3 the following: The NR Certificate Holder may utilize calibration and test activities performed by subcontractors when surveys and audits are performed. As an alternative to performing a survey and audit for procuring Laboratory Calibration and Test Services, the NR Certificate Holder as documented in their Quality Program may accept accreditation of an International Calibration and Test Laboratory Services by the International Laboratory Accreditation Cooperation (ILAC) Mutual Recognition Arrangement (MRA) provided this alternative method is described in the NR Certificate Holder' Quality Program and the following requirements are met: a) The NR Certificate Holder shall review and document verification that the supplier of calibration or test services was accredited by an accredited body recognized by the ILAC MRA encompassing ISO/IEC-17025:2005, "General Requirements for the Competence of Testing and Calibration Laboratories"; b) For procurement of calibration services, the published scope of accreditation for the calibration laboratory covers the needed measurement parameters, ranges and uncertainties. c) For procurement of testing services, the published scope of accreditation for

	the test laboratory covers the needed testing services including test methodology and tolerances/uncertainty. d) The NR Certificate Holder's purchase documents shall include: 1) Service provided shall be in accordance with their accredited ISO/IEC-17025:2005 program and scope of accreditation; 2) As-found calibration data shall be reported in the certificate of calibration when items are found to be out-of-calibration; 3) Standards used to perform calibration shall be identified in the certificate of calibration; 4) Notification of any condition that adversely impacts the laboratories ability to maintain the scope of accreditation; 5) Any additional technical and/or quality requirements, as necessary, which may include; tolerances, accuracies, ranges, and standards. 6) Service suppliers shall not subcontract services to any other supplier. e) The NR Certificate Holder shall upon receipt inspection, validate that the laboratory documentation certifies that: 1) Services provided by the laboratory has been performed in accordance with their ISO/IEC-17025:2005 program and performed within their scope; and 2) Purchase order requirements have been met.
17-154 Part 3, 1.6.6.2 r)	v) Audits The provisions identified in ASME NQA-1, Part 1, and Requirement 18 shall apply and shall include the following: A comprehensive system of planned and periodic ~~internal~~ audits of the "NR" Certificate Holder's Quality Assurance Program shall be performed ~~by the "NR" Certificate Holder~~. Audits shall include internal audits by the Certificate Holder and audits by the Authorized Inspection Agency. Audit frequency shall be specified in the organization's Quality Assurance Manual. Audits shall be conducted at least annually for any ongoing code activity to verify compliance with Quality Assurance Program requirements, performance criteria and to determine the effectiveness of the Quality Assurance Program. When no code work has been performed, the required annual audit need only include those areas of responsibility required to be continually maintained such as training, audits, organizational structure, and Quality Assurance Program revisions. The Quality Assurance Manual shall as a minimum describe the following:
NB17-0702 Part 3, 1.6.7.2 n) 2) f.	f. Nondestructive examination reports, including results of examinations, shall identify the ~~ASNT, SNT-TC-1A, CP-189, or ACCP~~name and certification level of personnel interpreting the examination results.
17-154	r) Audits

PR18-0304

National Board of Boiler and Pressure Vessel Inspectors
National Board Inspection Code
Submission of Public Review Comment
2019 Draft Edition

PLEASE SUBMIT ONLY ONE COMMENT/RECOMMENDATION PER PAGE
Make additional copies as needed

Comments Must be Received No Later Than: October 15, 2018

Instructions: If unable to submit electronically, please print this form and fax or mail. Print or type clearly.

Date: Sep. 10, 2018

Commenter Name: Alex Garbolevsky

Commenter Address: Hartford Steam Boiler
One State St., 8th Flr., Hartford, CT 06102-5024

Commenter Phone: (860) 722-5098

Commenter Fax: none

Commenter Email: alex_garbolevsky@hsb.com

Section/Subsection Referenced: Part 3, 9.1 (NB 18-4)

Comment/Recommendation: *Proposed Solution:* ☐ New Text ■ Revise Text ☐ Delete Text

Editorial: In definition of welding revise "metal" and "nonmetal" to "metallic" and "nonmetallic", respectively.

Source: ■ Own Experience/Idea ☐ Other Source/Article/Code/Standard

Submit Form To: Jonathan Ellis, NBIC Secretary, The National Board of Boiler & Pressure Vessel Inspectors, 1055 Crupper Avenue, Columbus, OH 43229, email: jellis@nationalboard.org

NB Use Only

Commenter No. Issued: _____ Project Committee Referred To:

Comment No. Issued: _____ _____

	9.1 DEFINITIONS Add the following: **Brazing** – see Welding **Fusing** – see Welding **Welding (Brazing, Fusing)** – a group of processes which produce a localized coalescence of metal or nonmetal materials.
18-14 Part 3, 2.3 and Table 2.3	**2.3 STANDARD WELDING PROCEDURE SPECIFICATIONS** a) One or more SWPSs from NBIC Part 3, Table 2.3 may be used as an alternative to one or more WPS documents qualified by the organization making the repair or alteration, provided the organization accepts by certification (contained therein) full responsibility for the application of the SWPS in conformance with the application as stated in the SWPS. When using SWPSs, all variables listed on the Standard Welding Procedure are considered essential and, therefore, the repair organization cannot deviate, modify, amend, or revise any SWPSs. US Customary Units or metric units may be used for all SWPSs in NBIC Part 3, Table 2.3, but one system shall be used for application of the entire SWPS in accordance with the metric conversation table contained in the SWPS. The user may issue supplementary instructions as allowed by the SWPS. Standard Welding Procedures Specifications shall not be used in the same product joint together with the other Standard Welding Procedure Specifications or other welding procedure specifications qualified by the organization. b) The AWS reaffirms, amends or revises SWPSs in accordance with ANSI procedures. • Reaffirmed SWPSs: When reaffirmation occurs without revision to the SWPS, the letter R is added to the SWPS designation. • Amended SWPSs: When an amendment occurs the initials AMD1 is added to the SWPS designation Amendments are issued when essential for the prompt correction of an error that could be misleading. Amendments are incorporated into the existing text of the SWPS, which is reprinted and clearly marked as incorporating an amendment(s), and which is identified in the revised Foreword of the amended SWPS. • Revised SWPSs: When a revision to a published SWPS occurs, the publication date is added to the SWPS designation. The date of the superseded SWPS is also noted on the cover page. Previous versions of the superseded SWPS may be used at the option of the R Certificate holder. **SMAW — Shielded Metal Arc Welding** Standard Welding Procedure Specification for Shielded Metal Arc Welding of Carbon Steel, (M-1/P-1, Group 1 or 2), 3/16 in. (5 mm) through 3/4 in. (19 mm), in the As-Welded Condition, With Backing. — B2.1.001-90 and B2.1-1-001: 90(R2006) Standard Welding Procedure Specification for Shielded Metal Arc Welding of Carbon Steel (M-1/P-1/S-1, Group — B2.1-1-016-94

PR18-0305 - Duplicate of PR18-0304

National Board of Boiler and Pressure Vessel Inspectors
National Board Inspection Code
Submission of Public Review Comment
2019 Draft Edition

PLEASE SUBMIT ONLY ONE COMMENT/RECOMMENDATION PER PAGE
Make additional copies as needed

Comments Must be Received No Later Than: October 15, 2018

Instructions: If unable to submit electronically, please print this form and fax or mail. Print or type clearly.

Date: Sep. 10, 2018

Commenter Name: Alex Garbolevsky

Commenter Address: Hartford Steam Boiler
One State St., 8th Flr., Hartford, CT 06102-5024

Commenter Phone: (860) 722-5098

Commenter Fax: none

Commenter Email: alex_garbolevsky@hsb.com

Section/Subsection Referenced: Part 3, 9.1 (NB 18-4)

Comment/Recommendation: *Proposed Solution:* ☐ New Text ■ Revise Text ☐ Delete Text

Editorial: In definition of welding revise "metal" and "nonmetal" to "metallic" and "nonmetallic", respectively.

Source: ■ Own Experience/Idea ☐ Other Source/Article/Code/Standard

Submit Form To: Jonathan Ellis, NBIC Secretary, The National Board of Boiler & Pressure Vessel Inspectors, 1055 Crupper Avenue, Columbus, OH 43229, email: jellis@nationalboard.org

NB Use Only

Commenter No. Issued: _____ Project Committee Referred To:

Comment No. Issued: _____ _____

PR18-0306

National Board of Boiler and Pressure Vessel Inspectors
National Board Inspection Code
Submission of Public Review Comment
2019 Draft Edition

PLEASE SUBMIT ONLY ONE COMMENT/RECOMMENDATION PER PAGE
Make additional copies as needed

Comments Must be Received No Later Than: October 15, 2018

Instructions: If unable to submit electronically, please print this form and fax or mail. Print or type clearly.

Date: Sep. 10, 2018

Commenter Name: Alex Garbolevsky

Commenter Address: Hartford Steam Boiler
One State St., 8th Flr., Hartford, CT 06102-5024

Commenter Phone: (860) 722-5098

Commenter Fax: none

Commenter Email: alex_garbolevsky@hsb.com

Change this 3 to a 2 (typo)

Section/Subsection Referenced: Part 3, 3.3 b) (NB 18-14)

Comment/Recommendation: *Proposed Solution:* ☐ New Text ■ Revise Text ☐ Delete Text

Editorial: 2nd bullet - Technically, "AMD1" is not initias since it is a mix of letters and numbers. (It is also not an acronym.) Recommend the word "initials" be replaced by "suffix".

Changing the word "initials" to "suffix" is editorial since the "intent" remains the same.

Additional Comment from R&A SC: Add quotation marks around AMD1

Source: ■ Own Experience/Idea ☐ Other Source/Article/Code/Standard

Submit Form To: Jonathan Ellis, NBIC Secretary, The National Board of Boiler & Pressure Vessel Inspectors, 1055 Crupper Avenue, Columbus, OH 43229, email: jellis@nationalboard.org

NB Use Only

Commenter No. Issued: _____ Project Committee Referred To:

Comment No. Issued: _____ _____

	9.1 DEFINITIONS Add the following: **Brazing** – see Welding **Fusing** – see Welding **Welding (Brazing, Fusing)** – a group of processes which produce a localized coalescence of metal or nonmetal materials.
18-14 Part 3, 2.3 and Table 2.3	**2.3 STANDARD WELDING PROCEDURE SPECIFICATIONS** a) One or more SWPSs from NBIC Part 3, Table 2.3 may be used as an alternative to one or more WPS documents qualified by the organization making the repair or alteration, provided the organization accepts by certification (contained therein) full responsibility for the application of the SWPS in conformance with the application as stated in the SWPS. When using SWPSs, all variables listed on the Standard Welding Procedure are considered essential and, therefore, the repair organization cannot deviate, modify, amend, or revise any SWPSs. US Customary Units or metric units may be used for all SWPSs in NBIC Part 3, Table 2.3, but one system shall be used for application of the entire SWPS in accordance with the metric conversation table contained in the SWPS. The user may issue supplementary instructions as allowed by the SWPS. Standard Welding Procedures Specifications shall not be used in the same product joint together with the other Standard Welding Procedure Specifications or other welding procedure specifications qualified by the organization. b) The AWS reaffirms, amends or revises SWPSs in accordance with ANSI procedures. • Reaffirmed SWPSs: When reaffirmation occurs without revision to the SWPS, the letter R is added to the SWPS designation. • Amended SWPSs: When an amendment occurs the initials AMD1 is added to the SWPS designation Amendments are issued when essential for the prompt correction of an error that could be misleading. Amendments are incorporated into the existing text of the SWPS, which is reprinted and clearly marked as incorporating an amendment(s), and which is identified in the revised Foreword of the amended SWPS. • Revised SWPSs: When a revision to a published SWPS occurs, the publication date is added to the SWPS designation. The date of the superseded SWPS is also noted on the cover page. Previous versions of the superseded SWPS may be used at the option of the R Certificate holder.

SMAW — Shielded Metal Arc Welding	
Standard Welding Procedure Specification for Shielded Metal Arc Welding of Carbon Steel, (M-1/P-1, Group 1 or 2), 3/16 in. (5 mm) through 3/4 in. (19 mm), in the As-Welded Condition, With Backing.	B2.1.001-90 and B2.1-1-001: 90(R2006)
Standard Welding Procedure Specification for Shielded Metal Arc Welding of Carbon Steel (M-1/P-1/S-1, Group	B2.1-1-016-94

PR18-0307

National Board of Boiler and Pressure Vessel Inspectors
National Board Inspection Code
Submission of Public Review Comment
2019 Draft Edition

PLEASE SUBMIT ONLY ONE COMMENT/RECOMMENDATION PER PAGE
Make additional copies as needed

Comments Must be Received No Later Than: October 15, 2018

Instructions: If unable to submit electronically, please print this form and fax or mail. Print or type clearly.

Date: Sep. 12, 2018

Commenter Name: Alex Garbolevsky

Commenter Address: Hartford Steam Boiler
One State St., 8th Flr., Hartford, CT 06102-5024

Commenter Phone: (860) 722-5098

Commenter Fax: none

Commenter Email: alex_garbolevsky@hsb.com

Section/Subsection Referenced: Part 3, 2.5.3 e) (NB 18-48)

Comment/Recommendation: *Proposed Solution:* ☐ New Text ■ Revise Text ☐ Delete Text

Revise existing text: Re: SI equivalent of 3/8 in, per Table 7.4-c, this value should be 10 mm, which is the value used elsewhere in Part 3.

Source: ☐ Own Experience/Idea ■ Other Source/Article/Code/Standard NBIC Parts 1-4, Table 7.4-c

Submit Form To: Jonathan Ellis, NBIC Secretary, The National Board of Boiler & Pressure Vessel Inspectors, 1055 Crupper Avenue, Columbus, OH 43229, email: jellis@nationalboard.org

NB Use Only

Commenter No. Issued: _____ Project Committee Referred To:

Comment No. Issued: _____ _____

Standard Welding Procedure Specification for Gas Tungsten Arc Welding Followed by Shielded Metal Arc Welding of Austenitic Stainless Steel (M-8/P-8/S-8, Group 1), 1/8 in. (3.2 mm) through 1 ½ in. (38 mm) Thick, ER3XX and E3XX-XX, As-Welded Condition, Primarily Pipe Applications.	B2.1-8-214-97
Standard Welding Procedure Specification for Gas Tungsten Arc Welding Followed by Shielded Metal Arc Welding of Austenitic Stainless Steel (M-8/P-8/S-8, Group 1), 1/8 in. (3.2 mm) through 1 ½ in. (38 mm) Thick, ER3XX and E3XX-XX, As-Welded Condition, Primarily Pipe Applications.	B2.1-8-214:2001 R2012
Standard Welding Procedure Specification for Gas Tungsten Arc Welding With Consumable Insert Followed by Shielded Metal Arc Welding of Austenitic Stainless Steel (M-8/P-8/S-8, Group 1), 1/8 in. (3.2 mm) through 1 ½ in. (38 mm) thick, IN3XX, ER3XX, and E3XX-XX As-Welded Condition, Primarily Pipe Application.	B2.1-8-216-1998
Standard Welding Procedure Specification for Gas Tungsten Arc Welding with Consumable Insert Root followed by Shielded Metal Arc Welding of Austenitic Stainless Steel (M-8/P-8/S-8, Group 1), 1/8 in. (3.2 mm) through 1 ½ in. (38 mm) Thick, IN3XX, ER3XX, and E3XX-XX As-Welded Condition, Primarily Pipe Applications.	B2.1-8-216:2001 R2012

Combination of Carbon Steel (P-1 Material) To Austenitic Stainless Steel (P-8 Material)

SMAW — Shielded Metal Arc Welding	
Standard Welding Procedure Specifications for Shielded Metal Arc Welding of Carbon Steel (M-1/P-1/S-1, Groups 1 or 2) to Austenitic Stainless Steel (M-8/P-8/S-8, Group 1), 1/8 in. (3.2 mm) through 1 ½ in. (38 mm) Thick, E309 (L)-15, -16, or -17, As-Welded Condition, Primarily Pipe Applications.	B2.1-1/8-228:2002 R2013
GTAW — Gas Tungsten Arc Welding	
Standard Welding Procedure Specification for Gas Tungsten Arc Welding of Carbon Steel (M-1/P-1/S-1, Groups 1 or 2) to Austenitic Stainless Steel (M-8/P-8/S-8, Group 1), 1/16 in. (1.6 mm) through 1 ½ in. (38 mm) Thick, ER309 (L), As-Welded Condition, Primarily Pipe Applications.	**B2.1-1/8-227:2002, 2002 AMD1 and R2013**
Standard Welding Procedure Specifications for Gas Tungsten Arc Welding with Consumable Insert Root of Carbon Steel (M-1/P-1/S-1, Groups 1 or 2) to Austenitic Stainless Steel (M-8/P-8/S-8, Group 1), 1/16 in. (1.6 mm) through 1½ in. (38 mm) Thick, IN309 and ER309(L), As-Welded Condition, Primarily Pipe Applications.	**B2.1-1/8-230:2002, 2002 AMD1 and R2013**
GTAW/SMAW Combination of Welding Processes	
Standard Welding Procedure Specifications for Gas Tungsten Arc Welding followed by Shielded Metal Arc Welding of Carbon Steel (M-1/P-1/S-1,Groups 1 or 2) to Austenitic Stainless Steel (M-8/P-8/S-8, Group 1), 1/8 in. (3.2 mm) through 1½ in. (38 mm) Thick, ER309(L) and E309(L)-15, -16, or -17, As-Welded Condition, Primarily Pipe Applications.	**B2.1-1/8-229:2002, 2002-AMD1 and R2013**
Standard Welding Procedure Specifications for Gas Tungsten Arc Welding with Consumable Insert Root followed by Shielded Metal Arc Welding of Carbon Steel (M-1/P-1/S-1, Groups 1 or 2) to Austenitic Stainless Steel (M-8/P-8/S-8, Group 1), 1/8 in. (3.2 mm) through 1½ in. (38 mm) Thick, IN3009, ER309, and E309-15, -16, or -17 or IN309, ER309(L) and ER309(L)-15, -16, or -17, As-Welded Condition, Primarily Pipe Applications.	B2.1-1/8-231:2002 R2015

18-48 Part 3, 2.5.3 e)	e) Nondestructive Examination of Welds Prior to welding, the area prepared for welding shall be examined using either the Magnetic Particle (MT) or the Liquid Penetrant (PT) examination method to determine that no defects exist. After the finished weld has reached ambient temperature, and, when required by the specific welding method, the surface temper bead reinforcement layer has been removed substantially flush with the surface of the base metal, the weld shall be examined again by either of the above methods to determine that no defects

	exist using acceptance standards acceptable to the Inspector or original code of construction. In addition, welds greater than 3/8 in. (9.6 mm) deep or welds in a ~~boiler, pressure vessel, or piping system~~ pressure retaining item that were originally required to be ~~radiographed~~ volumetrically examined by the rules of the original code of construction, shall be ~~radiographically~~ examined in accordance with paragraph 4.2 of Part 3. ~~In situations where it is not practical to perform radiography, the accessible surfaces of each non radiographed repair weld shall be fully examined using the MT or PT method to determine that no defects exist and the maximum allowable working pressure and/or allowable temperature shall be re-evaluated to the satisfaction of the jurisdiction at the location of installation.~~
17-152 Part 3, 2.5.3.2 d) 4)	2.5.3.2 ~~4) For ASME Section VIII, Division 2 pressure vessels, where application of PWHT on in-service vessels has been demonstrated to cause harm to vessel material, full thickness temper bead repairs are permitted to pressure-retaining items of P-No. 4 and P-No. 5A materials. They shall be completed per NBIC Part 3, 3.3.5 with the following requirements:~~ 4) Full thickness temper bead weld repairs are permitted to pressure retaining items of P-No 4 and P-No 5A materials under the following conditions; a) ASME Section VIII, Division 2 pressure vessels, where application of PWHT on in-service vessels has been demonstrated to cause harm to vessel material. b) For tube to header welds in steam service. Full thickness weld repairs above shall be completed per NBIC Part 3, 3.3.5 with the following requirements: 1. The full thickness repair weld shall be verified as being the full penetration. 2. Volumetric examination of the full thickness weld shall be performed.
17-170 Part 3, 2.5.3.4 a)	**2.5.3.4 WELDING METHOD 4** When using this method, the following is required: a) This method is limited to repair welds in pressure retaining items for which the applicable rules of the original code of construction did not require notch toughness testing. The repair depth for temper bead repairs to pressure retaining items is limited to welds not penetrating though the full thickness. Full thickness temper bead weld repairs are permitted under the following conditions; 1) ASME Section VIII, Division 2 pressure vessels, where application of PWHT on in-

PR18-0308

National Board of Boiler and Pressure Vessel Inspectors
National Board Inspection Code
Submission of Public Review Comment
2019 Draft Edition

PLEASE SUBMIT ONLY ONE COMMENT/RECOMMENDATION PER PAGE
Make additional copies as needed

Comments Must be Received No Later Than: October 15, 2018

Instructions: If unable to submit electronically, please print this form and fax or mail. Print or type clearly.

Date: Sep. 12, 2018

Commenter Name: Alex Garbolevsky

Commenter Address: Hartford Steam Boiler
One State St., 8th Flr., Hartford, CT 06102-5024

Commenter Phone: (860) 722-5098

Commenter Fax: none

Commenter Email: alex_garbolevsky@hsb.com

Section/Subsection Referenced: Part 3, 2.5.3.2 d) 4) b) (NB 17-152)

Comment/Recommendation: *Proposed Solution:* ☐ New Text ■ Revise Text ☐ Delete Text

Recommend revise "tube to header" to "tube-to-header" (with hyphens) for style consistency with ASME. For example, they use "tube-to-tubesheet",

Source: ☐ Own Experience/Idea ■ Other Source/Article/Code/Standard ASME BPV IX

Submit Form To: Jonathan Ellis, NBIC Secretary, The National Board of Boiler & Pressure Vessel Inspectors, 1055 Crupper Avenue, Columbus, OH 43229, email: jellis@nationalboard.org

NB Use Only

Commenter No. Issued: _____ Project Committee Referred To:

Comment No. Issued: _____ _____

	exist using acceptance standards acceptable to the Inspector or original code of construction. In addition, welds greater than 3/8 in. (9.6 mm) deep or welds in a ~~boiler, pressure vessel, or piping system~~ pressure retaining item that were originally required to be ~~radiographed~~ volumetrically examined by the rules of the original code of construction, shall be ~~radiographically~~ examined in accordance with paragraph 4.2 of Part 3. ~~In situations where it is not practical to perform radiography, the accessible surfaces of each non radiographed repair weld shall be fully examined using the MT or PT method to determine that no defects exist and the maximum allowable working pressure and/or allowable temperature shall be re-evaluated to the satisfaction of the jurisdiction at the location of installation.~~
17-152 Part 3, 2.5.3.2 d) 4)	2.5.3.2 ~~4) For ASME Section VIII, Division 2 pressure vessels, where application of PWHT on in-service vessels has been demonstrated to cause harm to vessel material, full thickness temper bead repairs are permitted to pressure-retaining items of P-No. 4 and P-No. 5A materials. They shall be completed per NBIC Part 3, 3.3.5 with the following requirements:~~ 4) Full thickness temper bead weld repairs are permitted to pressure retaining items of P-No 4 and P-No 5A materials under the following conditions; a) ASME Section VIII, Division 2 pressure vessels, where application of PWHT on in-service vessels has been demonstrated to cause harm to vessel material. b) For tube to header welds in steam service. Full thickness weld repairs above shall be completed per NBIC Part 3, 3.3.5 with the following requirements: 1. The full thickness repair weld shall be verified as being the full penetration. 2. Volumetric examination of the full thickness weld shall be performed.
17-170 Part 3, 2.5.3.4 a)	**2.5.3.4 WELDING METHOD 4** When using this method, the following is required: a) This method is limited to repair welds in pressure retaining items for which the applicable rules of the original code of construction did not require notch toughness testing. The repair depth for temper bead repairs to pressure retaining items is limited to welds not penetrating though the full thickness. Full thickness temper bead weld repairs are permitted under the following conditions; 1) ASME Section VIII, Division 2 pressure vessels, where application of PWHT on in-

PR18-0309

National Board of Boiler and Pressure Vessel Inspectors
National Board Inspection Code
Submission of Public Review Comment
2019 Draft Edition

PLEASE SUBMIT ONLY ONE COMMENT/RECOMMENDATION PER PAGE
Make additional copies as needed

Comments Must be Received No Later Than: October 15, 2018

Instructions: If unable to submit electronically, please print this form and fax or mail. Print or type clearly.

Date: Sep. 12, 2018

Commenter Name: Alex Garbolevsky

Commenter Address: Hartford Steam Boiler
One State St., 8th Flr., Hartford, CT 06102-5024

Commenter Phone: (860) 722-5098

Commenter Fax: none

Commenter Email: alex_garbolevsky@hsb.com

Section/Subsection Referenced: Part 3, 3.3.3 u) 3) & 5) (NB 12-0801)

Comment/Recommendation: *Proposed Solution:* ☐ New Text ■ Revise Text ☐ Delete Text

In 3.3.3 u) 3) "OEM" and "MDR" are used for the first time. They are not explained until 3.3.3 u) 5). Recommend that the full terms and their abbreviations be used in 3.3.3 u) 3). The abbreviations can then be used by themselves in subsequent references.

See additional comment by R&A SC below

Source: ■ Own Experience/Idea ☐ Other Source/Article/Code/Standard

Submit Form To: Jonathan Ellis, NBIC Secretary, The National Board of Boiler & Pressure Vessel Inspectors, 1055 Crupper Avenue, Columbus, OH 43229, email: jellis@nationalboard.org

NB Use Only

Commenter No. Issued: _____ Project Committee Referred To:

Comment No. Issued: _____ _____

NB12-0801

Part 3, 3.3.3 u)

u) Repairs to plate heat exchangers (PHE) are limited to the following:

1) Welding on any pressure part, i.e. not limited to a flange, nozzle, or endplate;
2) In kind replacement of endplates, or welded nozzles,
3) Replacement of any failed connection or frame bolting, representing the replacement parts described in Part 3, 3.2.2-a), with no change of material or grade as described on the MDR or OEM-drawing,
4) The addition or repair of load bearing attachments (e.g., welded supports or lifting lugs) to the endplates.
5) Replacement of parts bearing certification or manufacturer's stamping with nochange in material allowed as described on the Manufacturer's Data Report (MDR) or verifiable Original Equipment Manufacturers (OEM) drawing.

Remove hyphen

Insert apostrophe

	service vessels has been demonstrated to cause harm to vessel material. 2) For tube to header welds in steam service. Full thickness weld repairs shall be completed per NBIC Part 3, 3.3.5 with the following requirements: 1) The full thickness repair weld shall be verified as being full penetration. 2) Volumetric examination of the full thickness weld shall be performed.
17-180 Part 3, 2.5.3.6	**2.5.3.6 WELDING METHOD 6** This welding method provides requirements for welding only Grade 91 tube material within the steam boiler setting. ~~and when it is impracticable to perform local postweld heat treatment (PWHT).~~ When using this welding method, the following applies:
17-151, Part 3, 2.5.3.6 c) 2)	2) The welding shall be limited to the SMAW and/or GTAW processes, manual or automatic, using suitably controlled maintenance procedures to avoid contamination by hydrogen producing sources. The surface of the metal shall be free of contaminants and kept dry.
NB12-0801 Part 3, 3.3.3 u)	u) Repairs to plate heat exchangers (PHE) are limited to the following: 1) Welding on any pressure part, i.e. not limited to a flange, nozzle, or endplate; 2) In kind replacement of endplates, or welded nozzles, 3) Replacement of any failed connection or frame bolting, representing the replacement parts described in Part 3, 3.2.2-a), with no change of material or grade as described on the MDR or OEM drawing, 4) The addition or repair of load bearing attachments (e.g., welded supports or lifting lugs) to the endplates. 5) Replacement of parts bearing certification or manufacturer's stamping with no-change in material allowed as described on the Manufacturer's Data Report (MDR) or verifiable Original Equipment Manufacturers (OEM) drawing.
17-150, Part 3, 3.4.1 d)	d) The pressure-retaining item has been pressure tested, as required, for the new service conditions. Any insulation, coatings, or coverings that may inhibit or compromise a meaningful pressure test shall be removed, to the extent identified by the Inspector. The pressure test may be waived if the original pressure test as recorded on the Manufacture's Data Report is at least equal to the calculated test pressure required to verify the integrity of the pressure-retaining item for the new conditions. If the pressure test is waived it shall be documented on Form R-2 with this statement in the Remarks section: "Pressure test waived in accordance with NBIC 3.4.1 d)."
NB12-0801 Part 3, 3.4.4	**3.4.4 EXAMPLES OF ALTERATIONS** a) An increase in the maximum allowable working pressure (internal or external) or temperature of a pressure-retaining item regardless of whether or not a physical change was made to the pressure-retaining item; b) A decrease in the minimum temperature; c) The addition of new nozzles or openings in a boiler or pressure vessel except those classified as repairs; d) A change in the dimensions or contour of a pressure-retaining item;

PR18-0310

National Board of Boiler and Pressure Vessel Inspectors
National Board Inspection Code
Submission of Public Review Comment
2019 Draft Edition

PLEASE SUBMIT ONLY ONE COMMENT/RECOMMENDATION PER PAGE
Make additional copies as needed

Comments Must be Received No Later Than: October 15, 2018

Instructions: If unable to submit electronically, please print this form and fax or mail. Print or type clearly.

Date: Sep. 12, 2018

Commenter Name: Alex Garbolevsky

Commenter Address: Hartford Steam Boiler
One State St., 8th Flr., Hartford, CT 06102-5024

Commenter Phone: (860) 722-5098

Commenter Fax: none

Commenter Email: alex_garbolevsky@hsb.com

Incorrect. Reference should be "Part 3, 3.4.1 d)"

Section/Subsection Referenced: Part 3, 3.3.4.1 d) (NB 17-150)

Comment/Recommendation: *Proposed Solution:* ☐ New Text ■ Revise Text ☐ Delete Text

Recommend the last sentence be revised, in part, to state: "...with NBIC Part 3, 3.4.1 d)" so as to specifically identify the Part of the NBIC in which the paragraph is referenced.

Source: ■ Own Experience/Idea ☐ Other Source/Article/Code/Standard

Submit Form To: Jonathan Ellis, NBIC Secretary, The National Board of Boiler & Pressure Vessel Inspectors, 1055 Crupper Avenue, Columbus, OH 43229, email: jellis@nationalboard.org

NB Use Only

Commenter No. Issued: _____ Project Committee Referred To:

Comment No. Issued: _____ _____

	service vessels has been demonstrated to cause harm to vessel material. 2) For tube to header welds in steam service. Full thickness weld repairs shall be completed per NBIC Part 3, 3.3.5 with the following requirements: 1) The full thickness repair weld shall be verified as being full penetration. 2) Volumetric examination of the full thickness weld shall be performed.
17-180 Part 3, 2.5.3.6	**2.5.3.6 WELDING METHOD 6** This welding method provides requirements for welding only Grade 91 tube material within the steam boiler setting. ~~and when it is impracticable to perform local postweld heat treatment (PWHT).~~ When using this welding method, the following applies:
17-151, Part 3, 2.5.3.6 c) 2)	2) The welding shall be limited to the SMAW and/or GTAW processes, manual or automatic, using suitably controlled maintenance procedures to avoid contamination by hydrogen producing sources. The surface of the metal shall be free of contaminants and kept dry.
NB12-0801 Part 3, 3.3.3 u)	u) Repairs to plate heat exchangers (PHE) are limited to the following: 1) Welding on any pressure part, i.e. not limited to a flange, nozzle, or endplate; 2) In kind replacement of endplates, or welded nozzles, 3) Replacement of any failed connection or frame bolting, representing the replacement parts described in Part 3, 3.2.2-a), with no change of material or grade as described on the MDR or OEM-drawing, 4) The addition or repair of load bearing attachments (e.g., welded supports or lifting lugs) to the endplates. 5) Replacement of parts bearing certification or manufacturer's stamping with no-change in material allowed as described on the Manufacturer's Data Report (MDR) or verifiable Original Equipment Manufacturers (OEM) drawing.
17-150, Part 3, 3.4.1 d)	d) The pressure-retaining item has been pressure tested, as required, for the new service conditions. Any insulation, coatings, or coverings that may inhibit or compromise a meaningful pressure test shall be removed, to the extent identified by the Inspector. The pressure test may be waived if the original pressure test as recorded on the Manufacture's Data Report is at least equal to the calculated test pressure required to verify the integrity of the pressure-retaining item for the new conditions. If the pressure test is waived it shall be documented on Form R-2 with this statement in the Remarks section: "Pressure test waived in accordance with NBIC 3.4.1 d)."
NB12-0801 Part 3, 3.4.4	**3.4.4 EXAMPLES OF ALTERATIONS** a) An increase in the maximum allowable working pressure (internal or external) or temperature of a pressure-retaining item regardless of whether or not a physical change was made to the pressure-retaining item; b) A decrease in the minimum temperature; c) The addition of new nozzles or openings in a boiler or pressure vessel except those classified as repairs; d) A change in the dimensions or contour of a pressure-retaining item;

PR18-0311

National Board of Boiler and Pressure Vessel Inspectors
National Board Inspection Code
Submission of Public Review Comment
2019 Draft Edition

PLEASE SUBMIT ONLY ONE COMMENT/RECOMMENDATION PER PAGE
Make additional copies as needed

Comments Must be Received No Later Than: October 15, 2018

Instructions: If unable to submit electronically, please print this form and fax or mail. Print or type clearly.

Date: Sep. 12, 2018

Commenter Name: Alex Garbolevsky

Commenter Address: Hartford Steam Boiler
One State St., 8th Flr., Hartford, CT 06102-5024

Commenter Phone: (860) 722-5098

Commenter Fax: none

Commenter Email: alex_garbolevsky@hsb.com

Section/Subsection Referenced: Part 3, 5.12.4.3 13) (NB 17-179)

Comment/Recommendation: *Proposed Solution:* ☐ New Text ■ Revise Text ☐ Delete Text

Correct "manufacturers" to "Manufacturer's".

Agree with using apostrophe but disagree on capitalizing the "M".

Resolution #1 Item.

Source: ■ Own Experience/Idea ☐ Other Source/Article/Code/Standard

Submit Form To: Jonathan Ellis, NBIC Secretary, The National Board of Boiler & Pressure Vessel Inspectors, 1055 Crupper Avenue, Columbus, OH 43229, email: jellis@nationalboard.org

NB Use Only

Commenter No. Issued: _____ Project Committee Referred To:

Comment No. Issued: _____ _____

52) Indicate the month, day and year the completed Form R-2 was signed by the Inspector.
53) Signature of the Inspector certifying the construction inspection.
54) Inspectors National Board commission number and endorsement that qualifies the Inspector to sign this report, and when required by the Jurisdiction, the applicable State or Provincial numbers.

5.12.4.3 INSTRUCTIONS FOR COMPLETING NATIONAL BOARD FORM R-3 REPORT

This guide is to be used when completing the National Board Form R-3, Report of Parts Fabricated by Welding. The numbers below correspond to the "circled" numbers shown on the Form R-3 in NBIC Part 3, 5.12.3. When computer generated, the format of the form shall replicate the type and relative location of the information depicted on the Form R-3 Report of Parts Fabricated by Welding. Note that a fillable version of the Form R-3 (NB-230) is available on the National Board website.

1) Initials of the National Board "R" Certificate of Authorization authorized representative who registers the Form R-3.

2) Initials of the Inspector who certified the completed Form R-3 for registration.

3) When registering a Form R-3 Report with the National Board, this line is solely designated for a unique sequential number assigned by the "R" Certificate Holder. When the "R" Form is not to be registered, indicated so by "N/A". As described in NBIC Part 3, Paragraph 5.6, a log shall be maintained identifying unique and sequentially numbered Form "R" reports that are registered with the National Board.

4) The name and address of the National Board "R" Certificate Holder who manufactured the welded parts as it appears on the "*Certificate of Authorization*".
5) If applicable, document the unique purchase order, job, or tracking number assigned by organization performing work.
6) Document name and address of organization that purchased the parts for incorporation into the repair or alteration. If the part's origin is unknown or the part was built for stock, so state.
7) Document name of organization responsible for specifying the code design conditions, if known. If origin of design conditions are not known, state "unknown."
8) Document name of organization responsible for performing the code design, if known. If code design organization is not known, state "unknown."

9) Name, section, and division of the design code, if known. If the design is not known, state "unknown."

10) Indicate code edition year used for fabrication.

11) Indicate code addenda date used for fabrication, if applicable.

12) Indicate the code paragraph reference for formula used to establish the MAWP, if known. If the code reference of the formula is not known, state "unknown."

13) If available, identify component by part's original name, function, or use the original equipment manufacturers "mark or item number."

PR18-0312

National Board of Boiler and Pressure Vessel Inspectors
National Board Inspection Code
Submission of Public Review Comment
2019 Draft Edition

PLEASE SUBMIT ONLY ONE COMMENT/RECOMMENDATION PER PAGE
Make additional copies as needed

Comments Must be Received No Later Than: October 15, 2018

Instructions: If unable to submit electronically, please print this form and fax or mail. Print or type clearly.

Date: Sep. 12, 2018

Commenter Name: Alex Garbolevsky

Commenter Address: Hartford Steam Boiler
One State St., 8th Flr., Hartford, CT 06102-5024

Commenter Phone: (860) 722-5098

Commenter Fax: none

Commenter Email: alex_garbolevsky@hsb.com

Section/Subsection Referenced: Part 3, 5.12.4.4 14) (NB 17-179)

Comment/Recommendation: *Proposed Solution:* ☐ New Text ■ Revise Text ☐ Delete Text

[1]Correct "Inspectors" to "Inspector's".
[2] Revise "Province" to "Provincial" to be consistent with current NBIC reference (Part 3, 5.12.4.1 28))

Agree with both proposed comments.
Same correction needed for (5.12.4.1, Instruction #38); 5.12.4.2, Instruction #54); 5.12.4.3, Instruction #46); 5.12.4.4, Instruction #14)

Resolution #1 Items.

Source: ■ Own Experience/Idea ☐ Other Source/Article/Code/Standard

Submit Form To: Jonathan Ellis, NBIC Secretary, The National Board of Boiler & Pressure Vessel Inspectors, 1055 Crupper Avenue, Columbus, OH 43229, email: jellis@nationalboard.org

NB Use Only

Commenter No. Issued: _____ Project Committee Referred To:

Comment No. Issued: _____ _____

	3, 5.6, a log shall be maintained identifying sequentially, any Form "R" registered with the National Board. *26)* If applicable, document the unique purchase order, job, or tracking number assigned by organization performing work. 27) Type or print name of authorized representative of the "R" Certificate Holder attesting to accuracy of the work described. 28) Indicate National Board "R" Certificate or Authorization number. 29) Indicate month, day, and year that the "R" Certificate or Authorization expires. 30) Record name of "R" Certificate Holder who performed the described work, using full name as shown on the Certificate of Authorization or an abbreviation acceptable to the National Board. 31) Signature of "R" Certificate Holder authorized representative. 32) Enter month, day, and year repair certified. 33) Type or print name of Inspector. 34) Indicate Inspector's Jurisdiction. 35) Indicate Inspector's employer. 36) Indicate address of Inspector's employer (city and state or province). 37) Indicate month, day, and year of final inspection by Inspector. For routine repairs this shall be the month, day, and year the Inspector reviews the completed routine repair package. 38) Inspectors National Board commission number and endorsement that qualifies the Inspector to sign this report, and when required by the Jurisdiction, the applicable State or Provincial numbers. 39) Signature of Inspector. 40) Indicate month, day, and year of Inspector signature. **5.12.4.2 INSTRUCTIONS FOR COMPLETING NATIONAL BOARD FORM R-2 REPORT** ***INFO NOTE: THE FORM R-2 ON PAGE 91 DOES NOT HAVE THE "BUBBLED'***

52) Indicate the month, day and year the completed Form R-2 was signed by the Inspector.
53) Signature of the Inspector certifying the construction inspection.
54) Inspectors National Board commission number and endorsement that qualifies the Inspector to sign this report, and when required by the Jurisdiction, the applicable State or Provincial numbers.

5.12.4.3 INSTRUCTIONS FOR COMPLETING NATIONAL BOARD FORM R-3 REPORT

This guide is to be used when completing the National Board Form R-3, Report of Parts Fabricated by Welding. The numbers below correspond to the "circled" numbers shown on the Form R-3 in NBIC Part 3, 5.12.3. When computer generated, the format of the form shall replicate the type and relative location of the information depicted on the Form R-3 Report of Parts Fabricated by Welding. Note that a fillable version of the Form R-3 (NB-230) is available on the National Board website.

1) Initials of the National Board "R" Certificate of Authorization authorized representative who registers the Form R-3.

2) Initials of the Inspector who certified the completed Form R-3 for registration.

3) When registering a Form R-3 Report with the National Board, this line is solely designated for a unique sequential number assigned by the "R" Certificate Holder. When the "R" Form is not to be registered, indicated so by "N/A". As described in NBIC Part 3, Paragraph 5.6, a log shall be maintained identifying unique and sequentially numbered Form "R" reports that are registered with the National Board.

4) The name and address of the National Board "R" Certificate Holder who manufactured the welded parts as it appears on the "*Certificate of Authorization*".
5) If applicable, document the unique purchase order, job, or tracking number assigned by organization performing work.
6) Document name and address of organization that purchased the parts for incorporation into the repair or alteration. If the part's origin is unknown or the part was built for stock, so state.
7) Document name of organization responsible for specifying the code design conditions, if known. If origin of design conditions are not known, state "unknown."
8) Document name of organization responsible for performing the code design, if known. If code design organization is not known, state "unknown."

9) Name, section, and division of the design code, if known. If the design is not known, state "unknown."

10) Indicate code edition year used for fabrication.

11) Indicate code addenda date used for fabrication, if applicable.

12) Indicate the code paragraph reference for formula used to establish the MAWP, if known. If the code reference of the formula is not known, state "unknown."

13) If available, identify component by part's original name, function, or use the original equipment manufacturers "mark or item number."

43) Indicate month, day, and year of final inspection by Inspector.

44) Indicate the month, day and year the completed Form "R" was signed by the Inspector.

45) Signature of Inspector.

46) Inspectors National Board commission number and endorsement that qualifies the Inspector to sign this report, and when required by the Jurisdiction, the applicable State or Provincial numbers.

5.12.4.4 INSTRUCTIONS FOR COMPLETING NATIONAL BOARD FORM R-4 REPORT

This guide is to be used when completing the National Board Form R-4, Report Supplement Sheet. The numbers below correspond to the "circled" numbers shown on the Form R-4 in NBIC Part 3, 5.12.4. When computer generated, the format of the form shall replicate the type and relative location of the information depicted on the Form R-4, Report Supplement Sheet. Note that a fillable version of the Form R-4 (NB-231) is available on the National Board website.

1) When registering a Form "R" Report with the National Board, this line is solely designated for a unique sequential number assigned by the "R" Certificate Holder. When the "R" Form is not to be registered, indicate so by "N/A". As described in NBIC Part 3, Paragraph 5.6, a log shall be maintained identifying unique and sequentially numbered Form "R" reports that are registered with the National Board. Complete information identical to that shown on the Form "R" to which this sheet is a supplement.

2) If applicable, document the unique purchase order, job, or tracking number, assigned by the organization performing work.

3) The name and address of the Certificate Holder performing the work as it appears on the "*Certificate of Authorization*".

4) Name and address of the owner of the pressure-retaining item.

5) Name and address of plant or facility where the pressure-retaining item is installed.

6) Indicate the Form "R" type to which this report is supplementary. Example: Form R-1, Form R-2, Form R-3.

7) Indicate the reference line number from the Form "R" to which this report is supplementary.

8) Complete information for which there was insufficient space on the reference Form "R".

9) Indicate the date certified.

10) Signature of the repair organizations authorized representative.

11) Record name of "R" Certificate Holder who performed the described work, using full name as shown on the Certificate of Authorization or an abbreviation acceptable to the National Board.

12) Indicate the date the form was completed by the Inspector.

13) Signature of the Inspector.

	14) Inspectors National Board commission number and endorsement that qualifies the Inspector to sign this report, and when required by the Jurisdiction, the applicable State or Province numbers.

PR18-0313 - Duplicate of PR18-0312

National Board of Boiler and Pressure Vessel Inspectors
National Board Inspection Code
Submission of Public Review Comment
2019 Draft Edition

PLEASE SUBMIT ONLY ONE COMMENT/RECOMMENDATION PER PAGE
Make additional copies as needed

Comments Must be Received No Later Than: October 15, 2018

Instructions: If unable to submit electronically, please print this form and fax or mail. Print or type clearly.

Date: Sep. 12, 2018

Commenter Name: Alex Garbolevsky

Commenter Address: Hartford Steam Boiler
One State St., 8th Flr., Hartford, CT 06102-5024

Commenter Phone: (860) 722-5098

Commenter Fax: none

Commenter Email: alex_garbolevsky@hsb.com

Section/Subsection Referenced: Part 3, 5.12.4.4 14) (NB 17-179)

Comment/Recommendation: *Proposed Solution:* ☐ New Text ■ Revise Text ☐ Delete Text

[1]Correct "Inspectors" to "Inspector's".
[2] Revise "Province" to "Provincial" to be consistent with current NBIC reference (Part 3, 5.12.4.1 28))

Duplicate Comment. See PR18-0312

Source: ■ Own Experience/Idea ☐ Other Source/Article/Code/Standard

Submit Form To: Jonathan Ellis, NBIC Secretary, The National Board of Boiler & Pressure Vessel Inspectors, 1055 Crupper Avenue, Columbus, OH 43229, email: jellis@nationalboard.org

NB Use Only

Commenter No. Issued: _____ Project Committee Referred To:

Comment No. Issued: _____ _____

PR18-0314

National Board of Boiler and Pressure Vessel Inspectors
National Board Inspection Code
Submission of Public Review Comment
2019 Draft Edition

PLEASE SUBMIT ONLY ONE COMMENT/RECOMMENDATION PER PAGE
Make additional copies as needed

Comments Must be Received No Later Than: October 15, 2018

Instructions: If unable to submit electronically, please print this form and fax or mail. Print or type clearly.

Date: Sep. 12, 2018

Commenter Name: Alex Garbolevsky

Commenter Address: Hartford Steam Boiler
One State St., 8th Flr., Hartford, CT 06102-5024

Commenter Phone: (860) 722-5098

Commenter Fax: none

Commenter Email: alex_garbolevsky@hsb.com

Section/Subsection Referenced: Part 3, S1) (NB 16-1801)

Comment/Recommendation: *Proposed Solution:* ☐ New Text ■ Revise Text ☐ Delete Text

This is not part of the "action", but it may be worth considering a revision to S1.1.4 - FORMULA AND CALCULATIONS FOR STEAM LOCOMOTIVE BOILERS since rules for riveted construction (Part PR) were modernized in 2013 and Locomotive Boilers (Part PL) was added to Section I in 2015.

The current [2017 NBIC] text reads:
"a) Most steam locomotive boilers were manufactured in the first half of the 20th century or before. The calculations, formula, and shop practices used are now distant history and quite difficult to obtain. The rules for riveted construction were last published by ASME in Section I Code, 1971 Edition."

Source: ■ Own Experience/Idea ☐ Other Source/Article/Code/Standard

Submit Form To: Jonathan Ellis, NBIC Secretary, The National Board of Boiler & Pressure Vessel Inspectors, 1055 Crupper Avenue, Columbus, OH 43229, email: jellis@nationalboard.org

NB Use Only

Commenter No. Issued: _____ Project Committee Referred To:

Comment No. Issued: _____ _____

grain steels have, on occasion, been found to crack or split after complicated flanging, bending, and forming.

b) SA-36 shall not be used to make any pressure-retaining part such as shells, staybolt sleeves, or caps.

c) When rivets are made from SA-675, the finished rivets must meet the physical requirements of the original rivet specification or SA-31 Grade A or B.

d) When staybolt material tensile strength is greater than that of the firebox sheets, the firebox sheets deflect instead of the staybolts, which can result in the sheets developing cracks and leaking staybolts. In addition, high tensile strength steels are difficult to drive. Maximum allowable tensile strength shall be 7,500 psi (51.71 MPa).

(17) **TABLE S1.1.3.1**

Application	Specification
Boiler Tubes & Flues, Arch Tubes Superheater Units	SA-178 Grade A, SA-192, SA-210
Boiler & Firebox Plate, Pressure Retaining Plate	SA-285 Grade C, SA-515, SA-516, SA-203, SA-204
Welded Staybolts	SA-675, SA-36, SA-31
Threaded Staybolts and Patch Bolts	SA-31 Grade A SA-675 with a tensile strength of 47,000 psi to 65,000 psi inclusive
Staybolt Sleeves and Caps	SA-105 Forging, SA-675, SA-696
Boiler Braces	SA-675, SA-36
Rivets	SA-675, SA-31
Forged Parts & Fittings	SA-105, SA-181
Pressure-Retaining Steel Castings	SA-216, A-217
Hollow Cylindrical Pressure-Retaining Parts	SA-105 Forgings, SA-675 Bar Stock, SA-696
Superheater Unit Bolts & Nuts	Bolts - SA-193, Nuts - SA-194
Pipe Flanges	SA-181, SA-105
Bolts & Studs	SA-307 Grades A&B
Pipe	SA-106, SA-53 seamless
Bronze Castings & Washout Plugs	SB-61, SB-62, SB-148, SA-696

S1.1.4 FORMULA AND CALCULATIONS FOR STEAM LOCOMOTIVE BOILERS

a) Most steam locomotive boilers were manufactured in the first half of the 20th century or before. The calculations, formula, and shop practices used are now distant history and quite difficult to obtain. The rules for riveted construction were last published by ASME in Section I Code, 1971 Edition.

b) This supplement herein, is based in part on the ASME Code, Section III, 1952 Edition, which was the last published edition of the Steam Locomotive Code. The railroad industry has attempted to collect the old formula and some shop practices. These have been published by The Engineering Standards Committee for Steam Locomotives, Inc. (ESC) as Compendium, Volume 1, Compilation of Calculations,

which may be obtained from the Strasburg Rail Road, P.O. Box 96, Strasburg, PA 17579 (717) 687-7421.

S1.2 LOCOMOTIVE FIRETUBE BOILER REPAIRS

S1.2.1 REPAIR OF STAYBOLT HOLES

a) Staybolt holes may be repaired by welding, reaming, or retapping to a larger size or by installing a flush patch.

b) If the staybolt hole was threaded and is to be repaired by welding, the threads shall be removed prior to welding.

S1.2.2 THREADED STAYBOLTS

a) All threaded staybolts shall have either 11- or 12-thread pitch. Staybolt threads shall have a good close fit in sheets. Changing the staybolt thread pitch from 11 to 12 or the reverse shall be considered a repair.

b) All staybolts shorter than 8 in. (200 mm) in length shall have telltale holes. Staybolt telltale holes in existing staybolts shall be 3/16 in. (5 mm) to 7/32 in. (5.5 mm) in diameter and at least 1-1/4 in. (32 mm) deep in the outer end. When staybolts 8 in. (200 mm) or less in length are replaced, they shall be replaced with staybolts that have a telltale hole 3/16 in. (5 mm) to 7/32 in. (5.5 mm) in diameter their entire length, or with ones that have a 3/16 in. (5 mm) to 7/32 in. (5.5 mm) diameter hole in each end, drilled a minimum of 1-1/4 in. (32 mm) deep. On reduced body staybolts, the telltale hole shall extend beyond the fillet and into the reduced section of the staybolt. Ball socket-type flexible staybolts may have telltale holes that extend from the threaded end of the bolt into the bolt head for a distance of one-third the spherical bolt head diameter.

c) Telltale holes shall be reopened after driving and riveting heads.

d) Staybolt length shall be sized so the length of bolt projecting through the sheet is not less than 1/8 in. (3 mm) and is sufficient to produce a full head after driving and riveting the head.

e) The thread lead of both bolt ends and both firebox sheets shall be synchronized to permit the staybolt to be installed without stripping the threads.

f) When riveting staybolt heads, the bolt's opposite end shall be bucked or braced to prevent damaging the staybolt's threads. Bracing can be done several ways, such as using a pneumatic holder or a heavy steel bucking bar. Driving the heads on both ends of the staybolt simultaneously, using two pneumatic rivet hammers (double gunning), is acceptable. Staybolts are to be driven in such a manner as to expand radially the staybolt body and threads into the sheet prior to forming the head. Merely driving over the head is not acceptable.

g) Ball socket-type flexible staybolts shall not be braced by inserting a spacer under the cap.

h) Installation of larger diameter staybolts shall be considered a repair.

i) If the ends of staybolts are heated to facilitate forming the head or expanding the threads into the sheet, the lower critical temperature of the sheet and staybolt material shall not be exceeded.

j) The minimum height of the staybolt head measured at its highest point shall be 1/16 in. (1.5 mm).

k) When the diameter of the staybolt head has been reduced to the major diameter of the staybolt thread at any location either because of erosion during service or problems during installation, the staybolt shall be replaced. Repair is prohibited.

PR18-0315 - Duplicate of PR18-0314

National Board of Boiler and Pressure Vessel Inspectors
National Board Inspection Code
Submission of Public Review Comment
2019 Draft Edition

PLEASE SUBMIT ONLY ONE COMMENT/RECOMMENDATION PER PAGE
Make additional copies as needed

Comments Must be Received No Later Than: October 15, 2018

Instructions: If unable to submit electronically, please print this form and fax or mail. Print or type clearly.

Date: Sep. 12, 2018

Commenter Name: Alex Garbolevsky

Commenter Address: Hartford Steam Boiler
One State St., 8th Flr., Hartford, CT 06102-5024

Commenter Phone: (860) 722-5098

Commenter Fax: none

Commenter Email: alex_garbolevsky@hsb.com

Section/Subsection Referenced: Part 3, S1) (NB 16-1801)

Comment/Recommendation: *Proposed Solution:* ☐ New Text ■ Revise Text ☐ Delete Text

This is not part of the "action", but it may be worth considering a revision to S1.1.4 - FORMULA AND CALCULATIONS FOR STEAM LOCOMOTIVE BOILERS since rules for riveted construction (Part PR) were modernized in 2013 and Locomotive Boilers (Part PL) was added to Section I in 2015.

The current [2017 NBIC] text reads:
"a) Most steam locomotive boilers were manufactured in the first half of the 20th century or before. The calculations, formula, and shop practices used are now distant history and quite difficult to obtain. The rules for riveted construction were last published by ASME in Section I Code, 1971 Edition."

Source: ■ Own Experience/Idea ☐ Other Source/Article/Code/Standard

Submit Form To: Jonathan Ellis, NBIC Secretary, The National Board of Boiler & Pressure Vessel Inspectors, 1055 Crupper Avenue, Columbus, OH 43229, email: jellis@nationalboard.org

NB Use Only

Commenter No. Issued: _____ Project Committee Referred To:

Comment No. Issued: _____ _____

PR18-0316

National Board of Boiler and Pressure Vessel Inspectors
National Board Inspection Code
Submission of Public Review Comment
2019 Draft Edition

PLEASE SUBMIT ONLY ONE COMMENT/RECOMMENDATION PER PAGE
Make additional copies as needed

Comments Must be Received No Later Than: October 15, 2018

Instructions: If unable to submit electronically, please print this form and fax or mail. Print or type clearly.

Date: Sep. 12, 2018

Commenter Name: Alex Garbolevsky

Commenter Address: Hartford Steam Boiler
One State St., 8th Flr., Hartford, CT 06102-5024

Commenter Phone: (860) 722-5098

Commenter Fax: none

Commenter Email: alex_garbolevsky@hsb.com

Section/Subsection Referenced: Part 3, S3.5.5 f) (NB 15-2210)

Comment/Recommendation: *Proposed Solution:* ☐ New Text ■ Revise Text ☐ Delete Text

The second sentence should be editorially revised in 2 places:
[1] R and G should be within quotation marks ("R", "G");
[2] Currect "concurrence fo the Inspector" to "concurrence of the Inspector".

See Attachment 1 for Action Item with referenced text highlighted.
See Attachment 2 for proposed changes incorporated; including R&A SC additional editorial suggestions.

Source: ■ Own Experience/Idea ☐ Other Source/Article/Code/Standard

Submit Form To: Jonathan Ellis, NBIC Secretary, The National Board of Boiler & Pressure Vessel Inspectors, 1055 Crupper Avenue, Columbus, OH 43229, email: jellis@nationalboard.org

NB Use Only

Commenter No. Issued: _____ Project Committee Referred To:

Comment No. Issued: _____ _____

For Committee Use Only

S3.5.4

(17) ~~S3.5.5~~ PLUGGING OF LEAKING OR DAMAGED TUBES

a) The material used for plugging tubes shall comply with the requirements of the ASME Boiler and Pressure Vessel Code, Section VIII, Division 1, Part UIG.

b) The point(s) of leakage shall be verified, and the corresponding leak site(s) shall be marked/labeled on the tubesheet, and recorded.

c) A plug shall be used to plug each end of the tube(s) in question and each plug shall have a minimum length of 1 in. (25 mm). Multiple plugs may be used.

d) The tube(s) shall be prepared for plugging by enlarging the inside of the tube(s) with a suitable drill bit or reamer.

1) To ensure a sound cement joint between the tube sidewall and the plug, a slightly smaller diameter plug shall be selected. The maximum clearance between the tube inside diameter and the outside diameter of the plug shall not exceed 3/32 in. (2.4 mm).

2) As an alternative to d)1) a mandrel with an abrasive, such as sandpaper, may be used, as long as the maximum tube I.D. to plug O.D. clearance of 3/32 in. (2.4 mm) is not exceeded.

3) The minimum plug insertion depth of the prepared hole(s) shall meet the minimum combined plug length requirements of "c". When the minimum plug length of "c" is exceeded, the total insertion depth of the plugs may exceed the combined length of the plugs; however, the longer plugs shall not project outside the face of the tube(s) being plugged.

e) Plugging of leaking or damaged tubes shall be performed by certified cementing technicians, using qualified cementing procedures, in accordance with the requirements of the ASME Boiler and Pressure Vessel Code, Section VIII, Division 1, Part UIG.

See below for new S3.5.4 f)

g) ~~f)~~ The cement shall be prepared per the cement manufacturer's instructions.

h) ~~g)~~ When cementing the plugs, 100% of individual plugs, as well as the inside diameter of the tube opening(s), shall be coated with cement. The plugs shall then be inserted one by one, against each other, into each end of the tube(s) being plugged.

i) ~~h)~~ Once the plugging is completed, and before the cement cures, the endplugs may need to be held in place, as newly cemented plugs may exhibit a tendency to dislodge from the plugged tube(s) prior to final curing of the cement.

j) ~~i)~~ Curing time is dependent upon the cement manufacturer's instructions, and is considered complete when the cement is hardened to the point that it cannot be indented with pressure from a flat screwdriver or other similar instrument.

k) ~~j)~~ After the cement is completely cured, the plugged, cemented area(s) on the tubesheet face may be dressed with sandpaper or other suitable abrasive.

l) ~~k)~~ Repaired tubes shall be tested in accordance with this code, using a method acceptable to the Inspector, with a written procedure as approved by the manufacturer's internal quality system, to ensure leaks have been repaired.

m) ~~l)~~ The scope of the work completed shall be described and reported on a Form R-1.

See below for new Figure S3.5.4

S3.5.5 ~~S3.5.6~~ TUBE REPLACEMENT

Tube replacement should be performed with the unit preferably in the horizontal position. Avoid replacing adjacent tubes simultaneously because the replacement areas may overlap or reduce the ligament between

SUPPL. 3

NOTE: All text below (black and red) is "new" text, approved by the NBIC Main Committee.

New S3.5.4 f)

f) As an alternative to e) any R Certificate Holder, with or without the letter "G" included on the "R" Certificate of Authorization, may install graphite tube plugs provided the following conditions are met. The R Certificate Holder shall gain the concurrence of the Inspector, and shall utilize a tube plugging kit provided by an ASME Certificate Holder authorized to use the G designator. The kit shall include the following items:

1. Certified graphite plugs and certified cement ingredients, both accompanied by the appropriate documentation (Partial Data Report).

2. The qualified cementing procedure of the ASME Certificate Holder authorized to use the G designator, and a step-by-step procedural checklist that shall be followed explicitly. The procedure shall address the entire tube plugging process including plug configuration, tube hole cleaning and preparation, mixing and applying of the cement, application of the plugs, securing the plugs during the curing process, controlling the curing process, and leak testing, thereby meeting S3.3.

3. Additional materials and procedure shall be provided and used to prepare a demonstration plug joint prior to performing the repair. This demonstration plug joint shall be tested by a twist (torsional) test designed to demonstrate acceptable application and curing of the cement (Fig. S3.5.4). The test procedure shall include acceptance criteria, which may be based on a principle of breakage of part of the test piece. A successful twist test, in conjunction with the completed procedural checklist, shall serve as a valid cement technician certification for a single repair operation. The twist test shall be witnessed by the Inspector.

The R Certificate Holder shall review the material certifications including verification that the shelf life of the cement has not been exceeded, and assure that the certified cement technician has completed the qualification demonstration, and has access to the procedure and checklist. The Inspector shall review and verify that the procedure and the other elements of the certified kit, as provided by the authorized G-designated ASME Certificate Holder, have been administered and completed prior to his acceptance. The R-certificate Holder shall note on Line 8 of the R-1 Form the installation of cemented graphite tube plugs in accordance with this section. The letter "G" shall not be applied to the vessel when performing this alternative repair. The R Certificate Holder shall identify and document the location of the plugged tubes on the R Form.

NOTE: Red text is proposed changes from the PR18-0316 document, and the additional changes suggested by the R&A SC on 10-23-18.

New S3.5.4 f)

f) As an alternative to e) any "R" Certificate Holder, with or without the letter "G" included on the "R" Certificate of Authorization, may install graphite tube plugs provided the following conditions are met. The "R" Certificate Holder shall gain the concurrence of the Inspector, and shall utilize a tube plugging kit provided by an ASME Certificate Holder authorized to use the "G" designator. The kit shall include the following items:

1. Certified graphite plugs and certified cement ingredients, both accompanied by the appropriate documentation (Partial Data Report).

2. The qualified cementing procedure of the ASME Certificate Holder authorized to use the "G" designator, and a step-by-step procedural checklist that shall be followed explicitly. The procedure shall address the entire tube plugging process including plug configuration, tube hole cleaning and preparation, mixing and applying of the cement, application of the plugs, securing the plugs during the curing process, controlling the curing process, and leak testing, thereby meeting S3.3.

3. Additional materials and procedure shall be provided and used to prepare a demonstration plug joint prior to performing the repair. This demonstration plug joint shall be tested by a twist (torsional) test designed to demonstrate acceptable application and curing of the cement (Fig. S3.5.4). The test procedure shall include acceptance criteria, which may be based on a principle of breakage of part of the test piece. A successful twist test, in conjunction with the completed procedural checklist, shall serve as a valid cement technician certification for a single repair operation. The twist test shall be witnessed by the Inspector.

The "R" Certificate Holder shall review the material certifications including verification that the shelf life of the cement has not been exceeded, and assure that the certified cement technician has completed the qualification demonstration, and has access to the procedure and checklist. The Inspector shall review and verify that the procedure and the other elements of the certified kit, as provided by the ~~authorized G-designated~~ ASME Certificate Holder authorized to use the "G" designator, have been administered and completed prior to his acceptance. The "R" C~~c~~ertificate Holder shall note on Line 8 of the R-1 Form the installation of cemented graphite tube plugs in accordance with this section. The letter "G" shall not be applied to the vessel when performing this alternative repair. The "R" Certificate Holder shall identify and document the location of the plugged tubes on the "R" Form.

FIGURE S3.5.4

DEMONSTRATION PLUG JOINT TWIST TEST

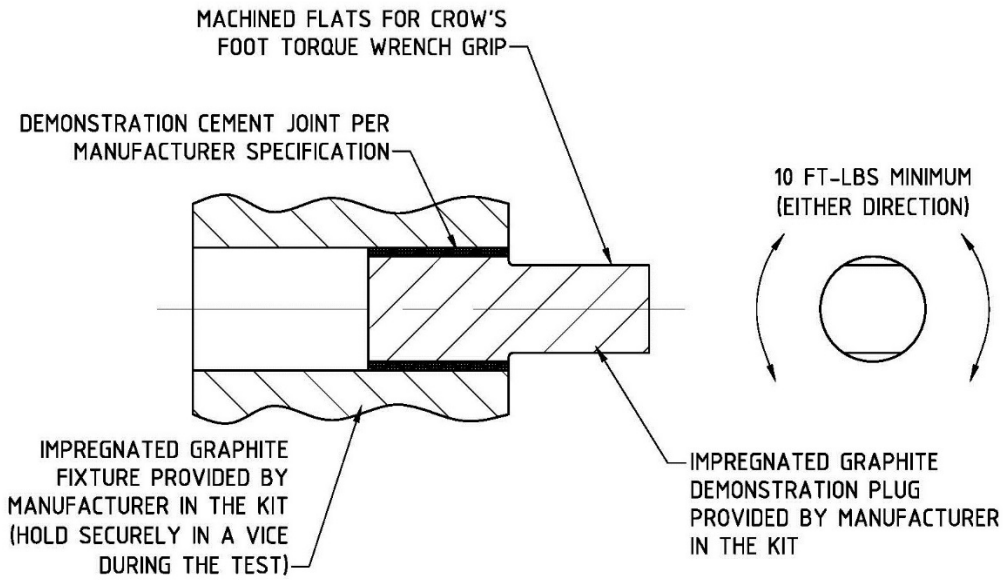

NOTE: THIS DEMONSTRATION APPLIES TO PLUGS OF ALL DIAMETERS AND LENGTHS.

PR18-0203

National Board of Boiler and Pressure Vessel Inspectors
National Board Inspection Code
Submission of Public Review Comment
2019 Draft Edition

PLEASE SUBMIT ONLY ONE COMMENT/RECOMMENDATION PER PAGE
Make additional copies as needed

Comments Must be Received No Later Than: October 15, 2018

Instructions: If unable to submit electronically, please print this form and fax or mail. Print or type clearly.

Date: Sep. 10, 2018

Commenter Name: Alex Garbolevsky

Commenter Address: Hartford Steam Boiler
One State St., 8th Flr., Hartford, CT 06102-5024

Commenter Phone: (860) 722-5098

Commenter Fax: none

Commenter Email: alex_garbolevsky@hsb.com

Section/Subsection Referenced: Part 2, 2.6, 2.7, 28. S14 2.6 (Part 4, 1.4, 3.3, 3.4, 3.5, 4.1, 4.2, 4.7.4, S7)

Comment/Recommendation: *Proposed Solution:* ☐ New Text ■ Revise Text ☐ Delete Text

This relates to NB17-0403, 18-70, 18-71, and 18-72.
Comment: See Part 2, 2.6.3.4 q). Is there any compelling reason why this wording needs to be substantially different from that found in Part 3 1.5.1 q)?:
"Any forms referenced in the manual shall be included. The form may be a part of the referencing document or included as an appendix. For clarity, the forms may be completed and identified as examples. The name and accepted abbreviations of the “R” Certificate Holder shall be included in the manual."

Source: ☐ Own Experience/Idea ■ Other Source/Article/Code/Standard NBIC Part 3, 1.5.1 q)

Submit Form To: Jonathan Ellis, NBIC Secretary, The National Board of Boiler & Pressure Vessel Inspectors, 1055 Crupper Avenue, Columbus, OH 43229, email: jellis@nationalboard.org

NB Use Only

Commenter No. Issued: _____ Project Committee Referred To:

Comment No. Issued: _____ _____

o) Field Testing

If field testing is included in the scope of work, the system shall address any differences or additions to the quality system required to properly control this activity, including the following:

1) Provisions for annual audits of field activities shall be included;

2) Provisions for use of owner-user measurement and test equipment, if applicable, shall be addressed.

p) Records Retention

The quality manual shall describe a system for filing, maintaining, and easily retrieving records supporting or substantiating the administration of the Quality System within the scope of the "VR" Certificate of Authorization. The record retention schedule described in the Quality System Manual is to follow the instructions identified in Table 2.6.3.4 p).

q) Exhibits

Forms used in the quality system shall be included in the manual with a written description. Forms exhibited ~~shall~~should be marked "SAMPLE" and completed in a manner typical of actual valve testing procedures.

Table 2.6.3.4p)

Reports, Records, or Documents for "T/O" Certificate Holders	**Instructions**	**Minimum Retention Period**
a) Record of testing or inspection	The testing and inspection program section shall include reference to a document (such as a report, traveler, or checklist) that outlines the specific testing and inspection procedures used in the testing of pressure relief valves.	5 years

PR18-0204

National Board of Boiler and Pressure Vessel Inspectors
National Board Inspection Code
Submission of Public Review Comment
2019 Draft Edition

PLEASE SUBMIT ONLY ONE COMMENT/RECOMMENDATION PER PAGE
Make additional copies as needed

Comments Must be Received No Later Than: October 15, 2018

Instructions: If unable to submit electronically, please print this form and fax or mail. Print or type clearly.

Date: Sep. 10, 2018

Commenter Name: Alex Garbolevsky

Commenter Address: Hartford Steam Boiler
One State St., 8th Flr., Hartford, CT 06102-5024

Commenter Phone: (860) 722-5098

Commenter Fax: none

Commenter Email: alex_garbolevsky@hsb.com

Section/Subsection Referenced: Part 2, 2.6.4 (and elsewhere)

Comment/Recommendation: *Proposed Solution:* ☐ New Text ■ Revise Text ☐ Delete Text

This relates to NB17-0403, 18-70, 18-71, and 18-72.
Editorial Comment: Proposed revisions should be text searched to ensure that referenced Certification Marks, stamps, symbols and designators (such as "T/O", "R", "UV", "NR", etc.) are enclosed in quotation marks to be consistent with the style used throughout the NBIC.

Source: ☐ Own Experience/Idea ■ Other Source/Article/Code/Standard NBIC Parts 1 - 4

Submit Form To: Jonathan Ellis, NBIC Secretary, The National Board of Boiler & Pressure Vessel Inspectors, 1055 Crupper Avenue, Columbus, OH 43229, email: jellis@nationalboard.org

NB Use Only

Commenter No. Issued: _____ Project Committee Referred To:

Comment No. Issued: _____ _____

PR18-0205

National Board of Boiler and Pressure Vessel Inspectors
National Board Inspection Code
Submission of Public Review Comment
2019 Draft Edition

PLEASE SUBMIT ONLY ONE COMMENT/RECOMMENDATION PER PAGE
Make additional copies as needed

Comments Must be Received No Later Than: October 15, 2018

Instructions: If unable to submit electronically, please print this form and fax or mail. Print or type clearly.

Date: Sep. 10, 2018

Commenter Name: Alex Garbolevsky

Commenter Address: Hartford Steam Boiler
One State St., 8th Flr., Hartford, CT 06102-5024

Commenter Phone: (860) 722-5098

Commenter Fax: none

Commenter Email: alex_garbolevsky@hsb.com

Section/Subsection Referenced: Part 2 / Part 4, S14.2 a) 4)

Comment/Recommendation: *Proposed Solution:* ☐ New Text ■ Revise Text ☐ Delete Text

Editorial Comment: Insert "the" directly before the words "Quality Department".

Source: ■ Own Experience/Idea ☐ Other Source/Article/Code/Standard

Submit Form To: Jonathan Ellis, NBIC Secretary, The National Board of Boiler & Pressure Vessel Inspectors, 1055 Crupper Avenue, Columbus, OH 43229, email: jellis@nationalboard.org

NB Use Only

Commenter No. Issued: _____ Project Committee Referred To:

Comment No. Issued: _____ _____

a) It is essential that the test only organization establish basic, specific procedures for the testing of pressure relief valves. The purpose of these recommended procedures is to provide the test only organization with guidelines for this important aspect of valve testing. It is realized that there are many types of valves and conditions under which they are tested and, for this reason, the specific items in these recommended procedures may not apply, or they may be inadequate for each of those types or to the detailed test procedures that may be required for each valve.

b) If the valve is to be bench tested, ensure that all sources of pressure have been removed from the valve prior to removal from service. If the valve is to be field tested using system pressure, ensure that all sources of pressure are under the control of the person performing the test.

c) S14.2 contains recommended procedures for the test only of spring-loaded and pilot operated pressure relief valves.

S14.2 PRESSURE RELIEF VALVES

~~Prior to field testing of a relief valve using system pressure or removal for bench testing, ensure that all sources of pressure have been removed from the valve.~~

a) Visual inspection

1) This information is to be recorded

a) Record user (customer) identification number;

b) Complete original PRV nameplate data, previous VR repair nameplate data, previous T/O test only nameplate data plus any important information received from customer.

c) If nameplate is missing, illegible or has incorrect information, it shall not be tested. Relief valve should be sent to VR repair shop per Part 4, 4.7.5

2) Check external adjustment seals are installed and match manufacturer and/or VR – T/O nameplate.

3) Check bonnet for venting on bellows type valves.

4) Check appearance for any unusual damage, missing, or misapplied parts. If sufficient damage or other unusual conditions are detected that may pose a safety risk during testing, set aside for review by Quality Department.

b) Existing Nameplate

1) An existing VR Nameplate, if applicable, shall not be removed from the relief valve

2) An existing TO Nameplate shall be removed from the relief valve

c) Relief Valve Data

1) "Set Pressure Definition" shall be obtained from National Board Document # NB-18

PR18-0208

National Board of Boiler and Pressure Vessel Inspectors
National Board Inspection Code
Submission of Public Review Comment
2019 Draft Edition

PLEASE SUBMIT ONLY ONE COMMENT/RECOMMENDATION PER PAGE
Make additional copies as needed

Comments Must be Received No Later Than: October 15, 2018

Instructions: If unable to submit electronically, please print this form and fax or mail. Print or type clearly.

Date: September 24, 2018

Commenter Name: Gary L. Scribner

Commenter Address: 1055 Crupper Ave.
Columbus, Oh 43229

Commenter Phone: 614-888-8320

Commenter Fax: 614-847-1828

Commenter Email: gscribner@nationalboard.org

Section/Subsection Referenced: Part 2, 2.6, 2.7, 2.8, S14

Comment/Recommendation: *Proposed Solution:* ☐ New Text ☐ Revise Text ■ Delete Text

The proposed wording under item NB17-0403, 18-70, 18-71, & 18-72 dealing with the T/O Accreditation Program is not an inservice inspection activity, so this working should be limited to NBIC Part 4 and should not be included in NBIC Part 2.

NOTE: Part two passed this item with a resolution of
"**Accepted, changes are incorporated**"

Source: ■ Own Experience/Idea ☐ Other Source/Article/Code/Standard

Submit Form To: Jonathan Ellis, NBIC Secretary, The National Board of Boiler & Pressure Vessel Inspectors, 1055 Crupper Avenue, Columbus, OH 43229, email: jellis@nationalboard.org

NB Use Only

Commenter No. Issued: _____ Project Committee Referred To:

Comment No. Issued: _____ _____

PR18-0401

National Board of Boiler and Pressure Vessel Inspectors
National Board Inspection Code
Submission of Public Review Comment
2019 Draft Edition

PLEASE SUBMIT ONLY ONE COMMENT/RECOMMENDATION PER PAGE
Make additional copies as needed

Comments Must be Received No Later Than: October 15, 2018

Instructions: If unable to submit electronically, please print this form and fax or mail. Print or type clearly.

Date: Sep. 12, 2018

Commenter Name: Alex Garbolevsky

Commenter Address: Hartford Steam Boiler
One State St., 8th Flr., Hartford, CT 06102-5024

Commenter Phone: (860) 722-5098

Commenter Fax: none

Commenter Email: alex_garbolevsky@hsb.com

Section/Subsection Referenced: Part 4, 1.4, etc.

Comment/Recommendation: *Proposed Solution:* ☐ New Text ■ Revise Text ☐ Delete Text

Observation: There is no consistency as to whether in-service should be hyphenated (such as in Part 4) or not (most uses in Parts 1, 2 3 and on website, such as when describing "T/O").

Source: ■ Own Experience/Idea ☐ Other Source/Article/Code/Standard

Submit Form To: Jonathan Ellis, NBIC Secretary, The National Board of Boiler & Pressure Vessel Inspectors, 1055 Crupper Avenue, Columbus, OH 43229, email: jellis@nationalboard.org

NB Use Only

Commenter No. Issued: _____ Project Committee Referred To:

Comment No. Issued: _____ _____

PR18-0402

National Board of Boiler and Pressure Vessel Inspectors
National Board Inspection Code
Submission of Public Review Comment
2019 Draft Edition

PLEASE SUBMIT ONLY ONE COMMENT/RECOMMENDATION PER PAGE
Make additional copies as needed

Comments Must be Received No Later Than: October 15, 2018

Instructions: If unable to submit electronically, please print this form and fax or mail. Print or type clearly.

Date: 9/21/18

Commenter Name: Thomas P. Beirne

Commenter Address: 7437 Pingue Dr.
Worthington, OH 43085

Commenter Phone: 614-431-3239

Commenter Fax: 614-848-3474

Commenter Email: tbeirne@nationalboard.org

Section/Subsection Referenced: Part 4, 2.2.1 a), S6.1, S6.3, Part 1, 2.9.1a)

Comment/Recommendation: *Proposed Solution:* ☐ New Text ■ Revise Text ☐ Delete Text

Referenced paragraphs contain the term "Power Operated" pressure relief valves. Propose revising text to say "Power Actuated" pressure relief valves to coincide with ASME new construction terminology.

Source: ☐ Own Experience/Idea ■ Other Source/Article/Code/Standard ASME Section I, III

Submit Form To: Jonathan Ellis, NBIC Secretary, The National Board of Boiler & Pressure Vessel Inspectors, 1055 Crupper Avenue, Columbus, OH 43229, email: jellis@nationalboard.org

NB Use Only

Commenter No. Issued: _____ Project Committee Referred To:

Comment No. Issued: _____ _____

For Committee Use Only

NB14-0602C
Proposal
07/17/2018
Page 1 of 3

2.2.1 GENERAL REQUIREMENTS

17-116 a) Only direct spring loaded, pilot operated, or power operated pressure relief valves ~~or~~

Part 4, 2.2.1	~~pilot operated pressure relief valves~~ designed to relieve steam shall be used for steam service. ~~b) Pressure relief valves are valves designed to relieve either steam or water, depending on the application.~~ ~~c~~b) Pressure relief valves shall be manufactured in accordance with a national or international standard. ~~d~~c) Deadweight or weighted-lever pressure relief valves shall not be used. ~~e~~d) For high temperature water boilers, pressure relief valves shall have a closed bonnet, and valve bodies shall not be constructed of cast iron. ~~f~~e) Pressure relief valves with an inlet connection greater than NPS 3 (DN 80) and used for pressure greater than 15 psig (100 kPa), shall have a flanged inlet connection or a welding-end inlet connection. The dimensions of flanges subjected to boiler pressure shall conform to the applicable standards. ~~g~~f) When a pressure relief valve is exposed to outdoor elements that may affect operation of the valve, the valve may be shielded with a cover. The cover shall be properly vented and arranged to permit servicing and normal operation of the valve.
17-117 Part 4, 2.2.1 g) (Part 1, 2.9.1)	g) When a pressure relief valve is exposed to outdoor elements that may affect operation of the valve, the valve may be shielded with a cover. The cover shall be ~~properly~~ vented and arranged to permit servicing and normal operation of the valve.
17-123 **Part 4, 2.3.6 h)**	h) A ~~suitable~~ condenser that will condense all the vapors discharged from the pressure relief valve may be used in lieu of piping the vapors to the atmosphere.
17-126 Part 4, 2.4.2 (Part 1, 3.9.2)	**Part 4: 2.4.2 PRESSURE RELIEF VALVE REQUIREMENTS FOR STEAM HEATING BOILERS** a) Pressure relief valves shall be manufactured in accordance with a national or international standard. b) Each steam boiler shall have one or more National Board capacity certified pressure relief valves of the spring pop type adjusted and sealed to discharge at a pressure not to exceed 15 psig (100 kPa). c) No pressure relief valve for a steam boiler shall be smaller than NPS 1/2 (DN 15). No pressure relief valve shall be larger than NPS 4 (DN 100). The inlet opening shall have an inside diameter equal to, or greater than, the seat diameter. d) The minimum valve capacity in lbs/hr (kg/hr) shall be ~~the greater of that determined by dividing the maximum Btu/hr (W) output at the boiler nozzle obtained by the firing of any fuel for which the unit is installed by 1,000 Btu/hr/lb (645 W/kg), or shall~~

	b) Prior to removal, repair, or disassembly of a pressure relief valve ensure that all sources of pressure have been removed. ~~b~~c) S4.2 contains recommended procedures for the repair of spring-loaded pressure relief valves, and S4.3 contains recommended procedures for the repair of pilot operated types of pressure relief valves. Information on packaging, shipping and transportation is included as S4.5. **S4.2 SPRING-LOADED PRESSURE RELIEF VALVES** ~~Prior to removal of a value from a system for a repair or any disassembly, ensure that all sources of pressure have been removed from the valve.~~ a) Visual inspection as received 1) This information is to be recorded: a. Record user (customer) identification number; b. Complete original PRV nameplate data, previous repair nameplate data, plus any important information received from customer; c. Check external adjustment seals for warranty repair; d. Check bonnet for venting on bellows type valves; and e. Check appearance for any unusual damage, missing, or misapplied parts. 2) If sufficient damage or other unusual conditions are detected that may pose a safety risk during preliminary testing, then proceed directly to S4.2 c) 3) Valves that are to be repaired in place proceed to S4.2 c) unless preliminary testing has been authorized by the owner.
NB16-0603 Part 4, S6	**SUPPLEMENT 6** **PROCEDURES FOR REPAIRS ~~TO ASME "NV" STAMPED PRESSURE RELIEF DEVICES~~ OF NUCLEAR SAFETY RELATED PRESSURE RELIEF VALVES** **S6.1 ~~INTRODUCTION~~ SCOPE** ~~ASME Code "NV" Class 1, 2, or 3 stamped pressure relief devices, which have been~~

~~capacity certified by the National Board,~~ Nuclear safety related pressure relief valves and power operated pressure relief valves may be repaired provided the following requirements are met. Valves being repaired under these provisions are intended to be those protecting the nuclear pressure boundary. Other pressure relief valves in the nuclear power plant (such as pressure relief valves on air compressors and auxiliary boilers) shall be repaired as required by the applicable Jurisdiction.

S6.2 DEFINITIONS

Safety Related – As used in this supplement and when applied to nuclear power plants, safety related means a structure, system, or component or part thereof that affects its safety function necessary to assure:

a) The integrity of the reactor coolant pressure boundary;

b) The capability to shut down the reactor and maintain it in a safe shutdown condition; or

c) The capability to prevent or mitigate the consequence of accidents which could result in potential offsite exposures.

S6.3 NUCLEAR SAFETY RELATED VALVE GROUPS

These rules classify nuclear safety related pressure relief valves into three groups based upon the original code of construction and capacity certification status.

Group 1: ASME Section I and Section VIII pressure relief valves *accepted by the Jurisdiction for use* ~~used~~ in nuclear safety related service with National Board capacity certification.

Group 2: ASME Section III NV stamped Class 1, 2, or 3 pressure relief valves with National Board capacity certification.

Group 3: Pressure relief valves not addressed in Group 1 or Group 2. This group shall include pressure relief valves without National Board capacity certification and/or pressure relief valves constructed to codes or standards other than ASME (see NBIC Part 3, Category 3).

The term pressure relief valve includes power operated pressure relief valves.

Replacement of rupture disks in rupture disk holders or in systems is not considered a repair activity under the scope of this supplement.

S6.4~~2~~ ADMINISTRATIVE PROCEDURES

a) The repair organization shall ~~hold~~ obtain a ~~valid~~ "VR" *Certificate of Authorization* ~~and stamp~~.

PR18-0403

National Board of Boiler and Pressure Vessel Inspectors
National Board Inspection Code
Submission of Public Review Comment
2019 Draft Edition

PLEASE SUBMIT ONLY ONE COMMENT/RECOMMENDATION PER PAGE
Make additional copies as needed

Comments Must be Received No Later Than: October 15, 2018

Instructions: If unable to submit electronically, please print this form and fax or mail. Print or type clearly.

Date: 10/11/2018

Commenter Name: David V. Luettgen

Commenter Address: 3 Kristin Rd
New Castle, DE 19720 United States

Commenter Phone: +1 31331 aiguy (313-312-4489)

Commenter Fax: 206-339-7985

Commenter Email: aiguy@live.com

Section/Subsection Referenced: NB 16-0603 Part 4, S6 S6.4 b) 2)

Comment/Recommendation: *Proposed Solution:* ☐ New Text ■ Revise Text ☐ Delete Text

2) Have a contract or agreement with an Authorized Nuclear Inspection Agency that is qualified in accordance with the requirements of ASME QAI-1, Qualifications for Authorized Inspection to provide inspection of repaired nuclear pressure relief valves;

Source: ☐ Own Experience/Idea ■ Other Source/Article/Code/Standard ASME Sect XI, QAI-1, NBIC Glossary

Submit Form To: Jonathan Ellis, NBIC Secretary, The National Board of Boiler & Pressure Vessel Inspectors, 1055 Crupper Avenue, Columbus, OH 43229, email: jellis@nationalboard.org

NB Use Only

Commenter No. Issued: _____ Project Committee Referred To:

Comment No. Issued: _____ _____

~~capacity certified by the National Board,~~ Nuclear safety related pressure relief valves and power operated pressure relief valves may be repaired provided the following requirements are met. Valves being repaired under these provisions are intended to be those protecting the nuclear pressure boundary. Other pressure relief valves in the nuclear power plant (such as pressure relief valves on air compressors and auxiliary boilers) shall be repaired as required by the applicable Jurisdiction.

S6.2 DEFINITIONS

Safety Related – As used in this supplement and when applied to nuclear power plants, safety related means a structure, system, or component or part thereof that affects its safety function necessary to assure:

a) The integrity of the reactor coolant pressure boundary;

b) The capability to shut down the reactor and maintain it in a safe shutdown condition; or

c) The capability to prevent or mitigate the consequence of accidents which could result in potential offsite exposures.

S6.3 NUCLEAR SAFETY RELATED VALVE GROUPS

These rules classify nuclear safety related pressure relief valves into three groups based upon the original code of construction and capacity certification status.

Group 1: ASME Section I and Section VIII pressure relief valves *accepted by the Jurisdiction for use* ~~used~~ in nuclear safety related service with National Board capacity certification.

Group 2: ASME Section III NV stamped Class 1, 2, or 3 pressure relief valves with National Board capacity certification.

Group 3: Pressure relief valves not addressed in Group 1 or Group 2. This group shall include pressure relief valves without National Board capacity certification and/or pressure relief valves constructed to codes or standards other than ASME (see NBIC Part 3, Category 3).

The term pressure relief valve includes power operated pressure relief valves.

Replacement of rupture disks in rupture disk holders or in systems is not considered a repair activity under the scope of this supplement.

S6.4~~2~~ ADMINISTRATIVE PROCEDURES

a) The repair organization shall ~~hold~~ obtain a ~~valid~~ "VR" *Certificate of Authorization* ~~and stamp~~.

b) The repair organization shall obtain a National Board "NR" *Certificate of Authorization* ~~and stamp~~. The requirements for said certificate ~~and stamp~~ include, but ~~are~~ is not limited to the following. The repair organization shall:

1) Maintain a documented quality assurance program that meets the applicable requirements of NBIC Part 3, 1.*6*. This program shall also include all the applicable requirements for the use of the "VR" stamp;

2) Have a contract or agreement with an Authorized Inspection Agency that is qualified in accordance with the requirements of ASME QAI-1, *Qualifications for Authorized Inspection* to provide inspection of repaired nuclear ~~"NV"-stamped~~ pressure relief ~~devices~~ valves ~~by Inspectors who have been qualified in accordance with the requirements of ASME QAI-1, *Qualifications for Authorized Inspection*~~;

3) Successfully complete a survey of the quality assurance program and its implementation. This survey shall be conducted by representatives of the National Board, the Jurisdiction wherein the applicant's repair facilities are located, and the applicant's Authorized Inspection Agency. Further verification of such implementation by the survey team may not be necessary if the applicant holds a valid ASME "NV" certificate and can verify by documentation the capability of implementing the quality assurance program for repair of "NV"-stamped pressure relief ~~devices~~valves, covered by the applicant's ASME "NV" certificate.

c) The application of the "NR" *Certificate of Authorization* and stamp shall clearly define the scope of intended activities with respect to the repair of ~~Section III, "NV"-stamped~~ nuclear pressure relief ~~devices~~valves.

d) Revisions to the quality assurance program shall be acceptable to the Authorized Nuclear Inspector Supervisor and the National Board before being implemented.

e) The scope of the "VR" *Certificate of Authorization* shall include repair of ~~"NV"-stamped~~ nuclear pressure relief ~~devices~~valves (denoted on the VR Certificate as Section III).

f) Verification testing of valves repaired by the applicant shall not be required provided such testing has been successfully completed under the applicant's "VR" certification program for the applicable test fluids.

g) A survey of the applicant for the "VR" *Certificate of Authorization* and endorsement of the repair of ~~"NV"-stamped~~nuclear pressure relief ~~devices~~valves may be made concurrently.

h) S6.5~~3~~ GENERAL RULES

1.Adoption of the Agenda

A.Approved 14/19 (74%)

B.Disapproved 0/19 (0%)

C.Abstention 0/19 (0%)

D.Not Voting 0/19 (0%)

No Answer 5/19 (26%)

	A	B	C	D
Mark Mooney	X			
Brian Morelock	X			
Jim Sekely	X			
Gary Scribner				
Robert Wielgoszinski				
Jim Pillow	X			
hm	X			
Paul Edwards	X			
Jim Getter	X			
N. Carter				
Kevin Simmons	X			
Melissa	X			
Tom Beirne				
Tom Beirne				
Paul Welch	X			
Don Cook	X			
Randy Austin	X			
Rob Troutt	X			
Joel Amato	X			

1.PR18-0101: Accept in principle, new business item opened

A.Approved 13/19 (68%)
B.Disapproved 0/19 (0%)
C.Abstention 0/19 (0%)
D.Not Voting 0/19 (0%)
No Answer 6/19 (32%)

	A	B	C	D
Mark Mooney	X			
Brian Morelock	X			
Jim Sekely	X			
Gary Scribner				
Robert Wielgoszinski				
Jim Pillow	X			
hm				
Paul Edwards	X			
Jim Getter	X			
N. Carter				
Kevin Simmons	X			
Melissa	X			
Tom Beirne				
Tom Beirne				
Paul Welch	X			
Don Cook	X			
Randy Austin	X			
Rob Troutt	X			
Joel Amato	X			

1.PR18-0102: Accept in principle, new business item opened

A.Approved 12/19 (63%)
B.Disapproved 1/19 (5%)
C.Abstention 0/19 (0%)
D.Not Voting 0/19 (0%)

No Answer 6/19 (32%)

	A	B	C	D
Mark Mooney	X			
Brian Morelock	X			
Jim Sekely	X			
Gary Scribner				
Robert Wielgoszinski				
Jim Pillow	X			
hm	X			
Paul Edwards	X			
Jim Getter	X			
N. Carter				
Kevin Simmons	X			
Melissa	X			
Tom Beirne				
Tom Beirne				
Paul Welch	X			
Don Cook	X			
Randy Austin				
Rob Troutt		X		
Joel Amato	X			

1.PR18-0201: Accepted, changes are incorporated

A.Approved 13/19 (68%)
B.Disapproved 0/19 (0%)
C.Abstention 0/19 (0%)
D.Not Voting 0/19 (0%)
No Answer 6/19 (32%)

	A	B	C	D
Mark Mooney	X			
Brian Morelock	X			
Jim Sekely	X			
Gary Scribner				
Robert Wielgoszinski				
Jim Pillow	X			
hm	X			
Paul Edwards	X			
Jim Getter	X			
N. Carter				
Kevin Simmons	X			
Melissa	X			
Tom Beirne				
Tom Beirne				
Paul Welch	X			
Don Cook	X			
Randy Austin				
Rob Troutt	X			
Joel Amato	X			

1.PR18-0202: Accepted, changes are incorporated

A.Approved 13/19 (68%)
B.Disapproved 0/19 (0%)
C.Abstention 0/19 (0%)
D.Not Voting 0/19 (0%)
No Answer 6/19 (32%)

	A	B	C	D
Mark Mooney	X			
Brian Morelock	X			
Jim Sekely	X			
Gary Scribner				
Robert Wielgoszinski				
Jim Pillow	X			
hm	X			
Paul Edwards	X			
Jim Getter	X			
N. Carter				
Kevin Simmons	X			
Melissa	X			
Tom Beirne				
Tom Beirne				
Paul Welch	X			
Don Cook	X			
Randy Austin				
Rob Troutt	X			
Joel Amato	X			

1.PR18-0203: Rejected for the following reason - The wording is currently consistent with the wording in the VR section of Part 4 of the NBIC.

A.Approved 13/20 (65%)
B.Disapproved 0/20 (0%)
C.Abstention 0/20 (0%)
D.Not Voting 0/20 (0%)
No Answer 7/20 (35%)

	A	B	C	D
Mark Mooney	X			
Brian Morelock	X			
Jim Sekely	X			
Gary Scribner				
Robert Wielgoszinski				
Jim Pillow	X			
hm	X			
Paul Edwards	X			
Jim Getter	X			
N. Carter				
Kevin Simmons	X			
Melissa	X			
Tom Beirne				
Tom Beirne				
Paul Welch	X			
Don Cook	X			
Randy Austin				
Randy Austin				
Rob Troutt	X			
Joel Amato	X			

1.PR18-0204: Accepted, changes are incorporated

A.Approved 13/19 (68%)
B.Disapproved 0/19 (0%)
C.Abstention 0/19 (0%)
D.Not Voting 0/19 (0%)
No Answer 6/19 (32%)

	A	B	C	D
Mark Mooney	X			
Brian Morelock	X			
Jim Sekely	X			
Gary Scribner				
Robert Wielgoszinski				
Jim Pillow	X			
hm	X			
Paul Edwards	X			
Jim Getter	X			
N. Carter				
Kevin Simmons	X			
Randy Austin				
Melissa	X			
Tom Beirne				
Tom Beirne				
Paul Welch	X			
Don Cook	X			
Rob Troutt	X			
Joel Amato	X			

1.PR18-0205: Accepted, changes are incorporated

A.Approved 13/19 (68%)
B.Disapproved 0/19 (0%)
C.Abstention 0/19 (0%)
D.Not Voting 0/19 (0%)
No Answer 6/19 (32%)

	A	B	C	D
Mark Mooney	X			
Brian Morelock	X			
Jim Sekely	X			
Gary Scribner				
Robert Wielgoszinski	X			
Jim Pillow	X			
hm				
Paul Edwards	X			
Jim Getter	X			
N. Carter				
Kevin Simmons	X			
Randy Austin				
Melissa	X			
Tom Beirne				
Tom Beirne				
Paul Welch	X			
Don Cook	X			
Rob Troutt	X			
Joel Amato	X			

1.PR18-0206: Accepted, changes are incorporated

A.Approved 13/19 (68%)
B.Disapproved 0/19 (0%)
C.Abstention 0/19 (0%)
D.Not Voting 0/19 (0%)
No Answer 6/19 (32%)

	A	B	C	D
Mark Mooney	X			
Brian Morelock	X			
Jim Sekely	X			
Gary Scribner				
Robert Wielgoszinski				
Jim Pillow	X			
hm	X			
Paul Edwards	X			
Jim Getter	X			
N. Carter				
Kevin Simmons	X			
Melissa	X			
Tom Beirne				
Tom Beirne				
Paul Welch	X			
Don Cook	X			
Randy Austin				
Rob Troutt	X			
Joel Amato	X			

1.PR18-0207: Accepted, changes are incorporated

A.Approved 13/19 (68%)
B.Disapproved 0/19 (0%)
C.Abstention 0/19 (0%)
D.Not Voting 0/19 (0%)
No Answer 6/19 (32%)

	A	B	C	D
Mark Mooney	X			
Brian Morelock	X			
Jim Sekely	X			
Gary Scribner				
Robert Wielgoszinski				
Jim Pillow	X			
hm	X			
Paul Edwards	X			
Jim Getter	X			
N. Carter				
Kevin Simmons	X			
Melissa	X			
Tom Beirne				
Tom Beirne				
Paul Welch	X			
Don Cook	X			
Randy Austin				
Rob Troutt	X			
Joel Amato	X			

1.PR18-0208: Accepted, changes are incorporated

A.Approved 13/19 (68%)
B.Disapproved 0/19 (0%)
C.Abstention 0/19 (0%)
D.Not Voting 0/19 (0%)
No Answer 6/19 (32%)

	A	B	C	D
Mark Mooney	X			
Brian Morelock	X			
Jim Sekely	X			
Gary Scribner				
Robert Wielgoszinski				
Jim Pillow	X			
hm	X			
Paul Edwards	X			
Jim Getter	X			
N. Carter				
Kevin Simmons	X			
Melissa	X			
Tom Beirne				
Tom Beirne				
Paul Welch	X			
Don Cook	X			
Randy Austin				
Rob Troutt	X			
Joel Amato	X			

1.PR18-0301: Accepted, changes are incorporated

A.Approved 13/18 (72%)
B.Disapproved 0/18 (0%)
C.Abstention 0/18 (0%)
D.Not Voting 0/18 (0%)
No Answer 5/18 (28%)

	A	B	C	D
Mark Mooney	X			
Brian Morelock	X			
Jim Sekely	X			
Gary Scribner				
Robert Wielgoszinski				
Jim Pillow	X			
hm	X			
Paul Edwards	X			
Jim Getter	X			
Kevin Simmons	X			
Melissa	X			
Tom Beirne				
Tom Beirne				
Paul Welch	X			
Don Cook	X			
Randy Austin				
Rob Troutt	X			
Joel Amato	X			

1.PR18-0302: Accepted, changes are incorporated

A.Approved 13/19 (68%)
B.Disapproved 0/19 (0%)
C.Abstention 0/19 (0%)
D.Not Voting 0/19 (0%)
No Answer 6/19 (32%)

	A	B	C	D
Mark Mooney	X			
Brian Morelock	X			
Jim Sekely	X			
Gary Scribner				
Robert Wielgoszinski				
Jim Pillow	X			
hm	X			
Paul Edwards	X			
Jim Getter	X			
N. Carter				
Kevin Simmons	X			
Melissa	X			
Tom Beirne				
Tom Beirne				
Paul Welch	X			
Don Cook	X			
Randy Austin				
Rob Troutt	X			
Joel Amato	X			

1.PR18-0303: Accepted, changes are incorporated

A.Approved 13/19 (68%)
B.Disapproved 0/19 (0%)
C.Abstention 0/19 (0%)
D.Not Voting 0/19 (0%)
No Answer 6/19 (32%)

	A	B	C	D
Mark Mooney	X			
Brian Morelock	X			
Jim Sekely	X			
Gary Scribner				
Robert Wielgoszinski				
Jim Pillow	X			
hm	X			
Paul Edwards	X			
Jim Getter	X			
N. Carter				
Kevin Simmons	X			
Melissa	X			
Tom Beirne				
Tom Beirne				
Paul Welch	X			
Don Cook	X			
Randy Austin				
Rob Troutt	X			
Joel Amato	X			

1.PR18-0304: Accepted, changes are incorporated

A.Approved 13/19 (68%)
B.Disapproved 0/19 (0%)
C.Abstention 0/19 (0%)
D.Not Voting 0/19 (0%)
No Answer 6/19 (32%)

	A	B	C	D
Mark Mooney	X			
Brian Morelock	X			
Jim Sekely	X			
Gary Scribner				
Robert Wielgoszinski				
Jim Pillow	X			
hm	X			
Paul Edwards	X			
Jim Getter	X			
N. Carter				
Kevin Simmons	X			
Melissa	X			
Tom Beirne				
Tom Beirne				
Paul Welch	X			
Don Cook	X			
Randy Austin				
Rob Troutt	X			
Joel Amato	X			

1.PR18-0305: Accepted, changes are incorporated

A.Approved 13/19 (68%)
B.Disapproved 0/19 (0%)
C.Abstention 0/19 (0%)
D.Not Voting 0/19 (0%)
No Answer 6/19 (32%)

	A	B	C	D
Mark Mooney	X			
Brian Morelock	X			
Jim Sekely	X			
Gary Scribner				
Robert Wielgoszinski				
Jim Pillow	X			
hm	X			
Paul Edwards	X			
Jim Getter	X			
N. Carter				
Kevin Simmons	X			
Melissa	X			
Tom Beirne				
Tom Beirne				
Paul Welch	X			
Don Cook	X			
Randy Austin				
Rob Troutt	X			
Joel Amato	X			

1.PR18-0306: Accepted, changes are incorporated

A.Approved 13/19 (68%)
B.Disapproved 0/19 (0%)
C.Abstention 0/19 (0%)
D.Not Voting 0/19 (0%)
No Answer 6/19 (32%)

	A	B	C	D
Mark Mooney	X			
Brian Morelock	X			
Jim Sekely	X			
Gary Scribner				
Robert Wielgoszinski				
Jim Pillow	X			
hm	X			
Paul Edwards	X			
Jim Getter	X			
N. Carter				
Kevin Simmons	X			
Melissa	X			
Tom Beirne				
Tom Beirne				
Paul Welch	X			
Don Cook	X			
Randy Austin				
Rob Troutt	X			
Joel Amato	X			

1.PR18-0307: Accepted, changes are incorporated

A.Approved 13/19 (68%)
B.Disapproved 0/19 (0%)
C.Abstention 0/19 (0%)
D.Not Voting 0/19 (0%)
No Answer 6/19 (32%)

	A	B	C	D
Mark Mooney	X			
Brian Morelock	X			
Jim Sekely	X			
Gary Scribner				
Robert Wielgoszinski				
Jim Pillow	X			
hm	X			
Paul Edwards	X			
Jim Getter	X			
N. Carter				
Kevin Simmons	X			
Melissa	X			
Tom Beirne				
Tom Beirne				
Paul Welch	X			
Don Cook	X			
Randy Austin				
Rob Troutt	X			
Joel Amato	X			

1.PR18-0308: Accepted, changes are incorporated

A.Approved 13/19 (68%)
B.Disapproved 0/19 (0%)
C.Abstention 0/19 (0%)
D.Not Voting 0/19 (0%)
No Answer 6/19 (32%)

	A	B	C	D
Mark Mooney	X			
Brian Morelock	X			
Jim Sekely	X			
Gary Scribner				
Robert Wielgoszinski				
Jim Pillow	X			
hm	X			
Paul Edwards	X			
Jim Getter	X			
N. Carter				
Kevin Simmons	X			
Melissa	X			
Tom Beirne				
Tom Beirne				
Paul Welch	X			
Don Cook	X			
Randy Austin				
Rob Troutt	X			
Joel Amato	X			

1.PR18-0309: Accepted, changes are incorporated

A.Approved 13/19 (68%)
B.Disapproved 0/19 (0%)
C.Abstention 0/19 (0%)
D.Not Voting 0/19 (0%)
No Answer 6/19 (32%)

	A	B	C	D
Mark Mooney	X			
Brian Morelock	X			
Jim Sekely	X			
Gary Scribner				
Robert Wielgoszinski				
Jim Pillow	X			
hm	X			
Paul Edwards	X			
Jim Getter	X			
N. Carter				
Kevin Simmons	X			
Melissa	X			
Tom Beirne				
Tom Beirne				
Paul Welch	X			
Don Cook	X			
Randy Austin				
Rob Troutt	X			
Joel Amato	X			

1.PR18-0310: Accepted, changes are incorporated

A.Approved 13/19 (68%)
B.Disapproved 0/19 (0%)
C.Abstention 0/19 (0%)
D.Not Voting 0/19 (0%)
No Answer 6/19 (32%)

	A	B	C	D
Mark Mooney	X			
Brian Morelock	X			
Jim Sekely	X			
Gary Scribner				
Robert Wielgoszinski				
Jim Pillow	X			
hm	X			
Paul Edwards	X			
Jim Getter	X			
N. Carter				
Kevin Simmons	X			
Melissa	X			
Tom Beirne				
Tom Beirne				
Paul Welch	X			
Don Cook	X			
Randy Austin				
Rob Troutt	X			
Joel Amato	X			

1.PR18-0311: Accepted, changes are incorporated (changing "manufacturers" to "manufacturer's")

A.Approved 13/19 (68%)
B.Disapproved 0/19 (0%)
C.Abstention 0/19 (0%)
D.Not Voting 0/19 (0%)
No Answer 6/19 (32%)

	A	B	C	D
Mark Mooney	X			
Brian Morelock	X			
Jim Sekely	X			
Gary Scribner				
Robert Wielgoszinski				
Jim Pillow	X			
hm	X			
Paul Edwards	X			
Jim Getter	X			
N. Carter				
Kevin Simmons	X			
Melissa	X			
Tom Beirne				
Tom Beirne				
Paul Welch	X			
Don Cook	X			
Randy Austin				
Rob Troutt	X			
Joel Amato	X			

1.PR18-0311: Rejected for the following reason - the word "manufacturer's" is being used as an adjective, not a noun. The letter "m" should be left lower case.

A.Approved 13/19 (68%)
B.Disapproved 0/19 (0%)
C.Abstention 0/19 (0%)
D.Not Voting 0/19 (0%)
No Answer 6/19 (32%)

	A	B	C	D
Mark Mooney	X			
Brian Morelock	X			
Jim Sekely	X			
Gary Scribner				
Robert Wielgoszinski				
Jim Pillow	X			
hm	X			
Paul Edwards	X			
Jim Getter	X			
N. Carter				
Kevin Simmons	X			
Melissa	X			
Tom Beirne				
Tom Beirne				
Paul Welch	X			
Don Cook	X			
Randy Austin				
Rob Troutt	X			
Joel Amato	X			

1.PR18-0312: Accepted, changes are incorporated

A.Approved 13/19 (68%)
B.Disapproved 0/19 (0%)
C.Abstention 0/19 (0%)
D.Not Voting 0/19 (0%)
No Answer 6/19 (32%)

	A	B	C	D
Mark Mooney	X			
Brian Morelock	X			
Jim Sekely	X			
Gary Scribner				
Robert Wielgoszinski				
Jim Pillow	X			
hm	X			
Paul Edwards	X			
Jim Getter	X			
N. Carter				
Kevin Simmons	X			
Melissa	X			
Tom Beirne				
Tom Beirne				
Paul Welch	X			
Don Cook	X			
Randy Austin				
Rob Troutt	X			
Joel Amato	X			

1.PR18-0313: Accepted, changes are incorporated

A.Approved 13/19 (68%)
B.Disapproved 0/19 (0%)
C.Abstention 0/19 (0%)
D.Not Voting 0/19 (0%)
No Answer 6/19 (32%)

	A	B	C	D
Mark Mooney	X			
Brian Morelock	X			
Jim Sekely	X			
Gary Scribner				
Robert Wielgoszinski				
Jim Pillow	X			
hm	X			
Paul Edwards	X			
Jim Getter	X			
N. Carter				
Kevin Simmons	X			
Melissa	X			
Tom Beirne				
Tom Beirne				
Paul Welch	X			
Don Cook	X			
Randy Austin				
Rob Troutt	X			
Joel Amato	X			

1.PR18-0314: Accept in principle, new business item opened

A.Approved 13/19 (68%)
B.Disapproved 0/19 (0%)
C.Abstention 0/19 (0%)
D.Not Voting 0/19 (0%)
No Answer 6/19 (32%)

	A	B	C	D
Mark Mooney	X			
Brian Morelock	X			
Jim Sekely	X			
Gary Scribner				
Robert Wielgoszinski				
Jim Pillow	X			
hm	X			
Paul Edwards	X			
Jim Getter	X			
N. Carter				
Kevin Simmons	X			
Melissa	X			
Tom Beirne				
Tom Beirne				
Paul Welch	X			
Don Cook	X			
Randy Austin				
Rob Troutt	X			
Joel Amato	X			

1.PR18-0315: Accept in principle, new business item opened

A.Approved 13/19 (68%)
B.Disapproved 0/19 (0%)
C.Abstention 0/19 (0%)
D.Not Voting 0/19 (0%)
No Answer 6/19 (32%)

	A	B	C	D
Mark Mooney	X			
Brian Morelock	X			
Jim Sekely	X			
Gary Scribner				
Robert Wielgoszinski				
Jim Pillow	X			
hm	X			
Paul Edwards	X			
Jim Getter	X			
N. Carter				
Kevin Simmons	X			
Melissa	X			
Tom Beirne				
Tom Beirne				
Paul Welch	X			
Don Cook	X			
Randy Austin				
Rob Troutt	X			
Joel Amato	X			

1.PR18-0316: Accepted, changes are incorporated

A.Approved 13/19 (68%)
B.Disapproved 0/19 (0%)
C.Abstention 0/19 (0%)
D.Not Voting 0/19 (0%)
No Answer 6/19 (32%)

	A	B	C	D
Mark Mooney	X			
Brian Morelock	X			
Jim Sekely	X			
Gary Scribner				
Robert Wielgoszinski				
Jim Pillow	X			
hm	X			
Paul Edwards	X			
Jim Getter	X			
N. Carter				
Kevin Simmons	X			
Melissa	X			
Tom Beirne				
Tom Beirne				
Paul Welch	X			
Don Cook	X			
Randy Austin				
Rob Troutt	X			
Joel Amato	X			

1.PR18-0401: Accept in principle, new business item opened

A.Approved 13/18 (72%)
B.Disapproved 0/18 (0%)
C.Abstention 0/18 (0%)
D.Not Voting 0/18 (0%)
No Answer 5/18 (28%)

	A	B	C	D
Mark Mooney	X			
Brian Morelock	X			
Jim Sekely				
Gary Scribner				
Robert Wielgoszinski	X			
Jim Pillow	X			
hm	X			
Paul Edwards	X			
Jim Getter	X			
Kevin Simmons	X			
Randy Austin				
Melissa	X			
Tom Beirne				
Tom Beirne				
Paul Welch	X			
Don Cook	X			
Rob Troutt	X			
Joel Amato	X			

1.PR18-0402: Accepted, changes are incorporated

A.Approved 13/18 (72%)
B.Disapproved 0/18 (0%)
C.Abstention 0/18 (0%)
D.Not Voting 0/18 (0%)
No Answer 5/18 (28%)

	A	B	C	D
Mark Mooney	X			
Brian Morelock	X			
Jim Sekely				
Gary Scribner				
Robert Wielgoszinski	X			
Jim Pillow	X			
hm	X			
Paul Edwards	X			
Jim Getter	X			
Kevin Simmons	X			
Randy Austin				
Melissa	X			
Tom Beirne				
Tom Beirne				
Paul Welch	X			
Don Cook	X			
Rob Troutt	X			
Joel Amato	X			

1.PR18-0403: Accepted, changes are incorporated

A.Approved 14/18 (78%)
B.Disapproved 0/18 (0%)
C.Abstention 0/18 (0%)
D.Not Voting 0/18 (0%)
No Answer 4/18 (22%)

	A	B	C	D
Mark Mooney	X			
Brian Morelock	X			
Jim Sekely	X			
Gary Scribner				
Robert Wielgoszinski	X			
Jim Pillow	X			
hm	X			
Paul Edwards	X			
Jim Getter	X			
Kevin Simmons	X			
Randy Austin				
Melissa	X			
Tom Beirne				
Tom Beirne				
Paul Welch	X			
Don Cook	X			
Rob Troutt	X			
Joel Amato	X			